International Journal of Mechatronics, Electrical and Computer Technology

Vol. 4(11), Apr, 2014, pp. 628-646, **ISSN**: 2305-0543
Available online at: http://www.aeuso.org

Improving Low frequency Oscillation Damping of a Multi-Area Power System Using Multi-Model Adaptive Control Approach

Ahmad Mostajabi*, Shahrokh Shojaeian and Mehri Lotfi

Electrical Engineering Department, Khomeinishahr Branch, Islamic Azad University,
P.O.Box 84175-119, Isfahan, Iran

*Corresponding Author's E-mail: *ahmad.mostajabi@iaukhsh.ac.ir*

Abstract

This paper proposes a multiple-model adaptive control (MMAC) method in order to improve dynamic stability of a multi-machine power system with hydro-turbo generators during a sudden change in the system loads. A bank of several classic second order models are used for each generator. Each model is linearized around an expectable operating point of the generator. A proper PI controller is designed for each model. The probability of each model is calculated based on closeness of its response to the real plant response with a Bayesian approach and suitable weights are assigned to each controller. The MMAC algorithm could identify the dominant post disturbance dynamics and switch to the appropriate controller to achieve the desired performance. Some simulation results are presented in order to verify the validity and effectiveness of the proposed control approach.

Keywords: Dynamic stability, multi-model control, Low frequency oscillations, robustness.

1. Introduction

Before 1960, because of computational difficulties multi-machine dynamic analysis was not available and the single machine infinite bus (SMIB) model was being considered to represent all inter-area dynamic. At the same time, classical control theory was being used for designing controllers and PSS were suggested with speed signals being fed to voltage regulators [1]. This proved very successful where the SMIB representations of inter-area effects were adequate and resulted in improved damping [2]. The power system design problem involves providing satisfactory control for varying demand and system topology [3]. Adaptive control is a well-known control method frequently applied when parameters of the plant to be controlled are not exactly known or

Vol. 4(11), Apr, 2014, pp. 628-646, **ISSN**: 2305-0543
Available online at: http://www.aeuso.org

are totally unknown. In the literature, adaptive control is generally studied as direct and indirect adaptive control. The former evaluates output error, also known as tracking error, whereas the latter invokes an explicit identifier and evaluates identification errors to produce the control signal. The adaptive controllers designed using direct, indirect or hybrid approaches have all given good results when the plant has unknown but constant parameters. They have also given satisfactory results when the plant parameters are time varying provided that the variation of plant parameters is not faster than adaptation of the applied control method. However, sudden and unpredictable changes in the plant parameters are not very surprising in many applications. For instance, load Changes may cause large variations in parameters of a robot arm or a DC motor. If a single identification model is used, it will have to adapt itself to the new environment before appropriate control action can be taken. Hence in single model adaptive control, slowness of adaptation may result in unacceptable large transient errors [4].

The multiple-model adaptive control (MMAC) was originally introduced by Lainiotis [5]. Multiple model based adaptive control and switching approach was proposed by Narendra and Balakrishnan as a remedy to improve transient response of linear systems [6]. The main idea in MMAC is to set up an adaptive system in which multiple identification models are incorporated and to switch the system to the most appropriate model according to some cost function [4]. The assumption, though, is that the actual system response can be represented by a single or a suitable combination of a finite number of linearized models. Separate controllers (PI, PID) are also assumed to be designed a priori to ensure satisfactory performance for each of these models. Theoretically, one cannot claim that a convex combination of stabilizing controllers necessarily produce a stable closed-loop response. However, it has been found that the MMAC strategy has produced adequate stability margin and robustness for a range of test cases considered in our research [3]. In this paper a MMAC method is used to improve dynamic stability of a multi-machine power system containing both hydro- and turbo- generators. For each generator, the proposed controller controls the exciter as well as the turbine governor. This control method is examined in the presence of few sudden changes in the system loads. The proposed method is tested on a 4-machine, 11-bus well-known test system [7]. Some simulation results are presented to compare the proposed controller with classical PI controller.

International Journal of Mechatronics, Electrical and Computer Technology

Vol. 4(11), Apr, 2014, pp. 628-646, **ISSN**: 2305-0543
Available online at: http://www.aeuso.org

2. Multiple Model Adaptive Systems

An indirect adaptive system includes one identifier which estimates the unknown parameters of the plant and these estimates are used in the controller according to the certainty equivalence principle [8]. Figure 1 shown block diagram of a multiple model adaptive system. *m* identifier models run together and yield estimates of the plant parameters. These estimates are then used to produce *m* estimates of the plant output. The differences between these estimated outputs and the actual output are the prediction errors which are the inputs of weight computation block. The difference in the response of each model with respect to the actual system response is used to generate individual model residuals. Using these residuals, the probability of each model representing the actual system response is computed. Based on the probabilities, suitable weights are assigned to individual control moves such that the less probable models carry less weight. This ensures that the controllers designed for the less probable models influence the final control move to a lesser extent. The resultant control action is, thus, a probability weighted average of the control moves of each individual controller [3, 6].

International Journal of Mechatronics, Electrical and Computer Technology

Vol. 4(11), Apr, 2014, pp. 628-646, **ISSN**: 2305-0543
Available online at: http://www.aeuso.org

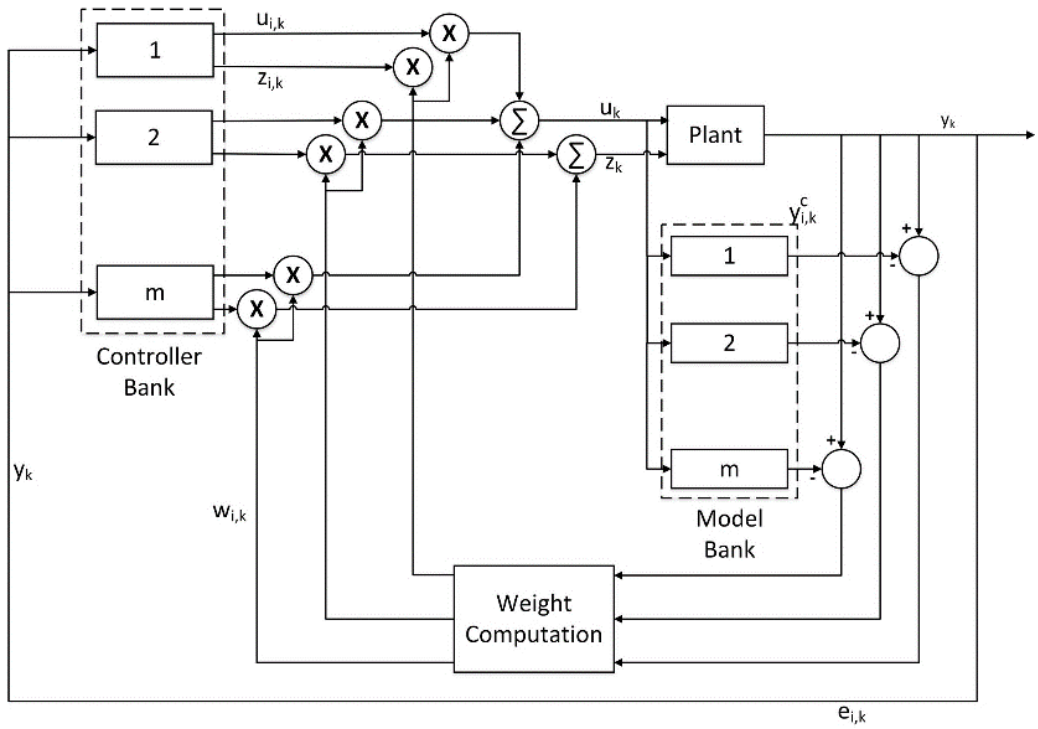

Figure 1: Schematic of MMAC strategy

At each stage of the recursive algorithm, primarily two tasks is performed i.e. calculation of probability using a Bayesian approach and assignation of suitable weights based on the probability value. [9].

2.1. Calculation of probability and weights

The recursive Bayes theorem is used for computing the probability of each model in the bank. The theorem calculates the conditional probability of the ith model in the model bank being the true model of the system given this model population. The probabilities are assumed to be stochastic and Gaussian in nature and thus take a form of the exponential of

International Journal of Mechatronics, Electrical and Computer Technology

Vol. 4(11), Apr, 2014, pp. 628-646, **ISSN**: 2305-0543
Available online at: http://www.aeuso.org

the negative square of the residuals [10]. At the kth step, the probability for the ith model is calculated as:

$$P_{i,k} = \frac{\exp\left(-\frac{1}{2} e_{i,k}^{T} C_{fe_{i,k}}\right) p_{i,k} - 1}{\sum_{j=1}^{N} \exp\left(-\frac{1}{2} e_{j,k}^{T} C_{fe_{i},k}\right) P_{j,k} - 1} \tag{1}$$

$$e_{i,k} = y_k - y_{i,k}^{c} \tag{2}$$

where $e_{i,k}$ is the error of ith model at the kth step, N denotes the total number of models in the model bank, and C_f is the rate of convergence of the probabilities. To summarize, for a given set of models, the above algorithm recursively determines the probability that the ith model is the true system model. The computation is based on the present model residuals with respect to the actual system response and the previous probabilities for each model [11]. Based on the probability of individual models, calculated during each recursive step, suitable weights are assigned to the control actions of each of the controllers. The model with a higher probability is assigned a higher weight and vice versa. At the kth step, the ith model is assigned a weight $W_{i,k}$ such that:

$$W_{i,k} = \frac{P_{i,k}}{\sum_{j=1}^{N} P_{j,k}} \tag{3}$$

At the kth iteration, the resulting probability-weighted control move is computed as:

$$u_k = \sum_{j=1}^{N} W_{j,k} \, .u_{j,k} \tag{4}$$

International Journal of Mechatronics, Electrical and Computer Technology

Vol. 4(11), Apr, 2014, pp. 628-646, **ISSN**: 2305-0543
Available online at: http://www.aeuso.org

3. Power System Model

Detailed modeling of the generators and their excitation systems is essential for studying the dynamic behavior of power systems. Besides the generators and their excitation systems, other components such as power system stabilizer (PSS), turbine and governor etc. need to be modeled as well.

3.1. Hydro Turbine and Governor

In a hydraulic power generation plant, the stored energy in water as a hydraulic fluid is converted into mechanical energy by means of hydraulic turbine. Hydraulic turbines are of two basic types: impulse turbines and reaction turbines. Selection of the type of the turbine depends upon the head and water flow rate of the dam. The shaft of the generating unit may be in a vertical, horizontal, or inclined direction depending on conditions of the plant and the type of turbine applied. Figure 2 demonstrates the simplified relationship between the basic elements of power generation process in a hydraulic power plant. Modeling of these elements is described in the following sections [12].

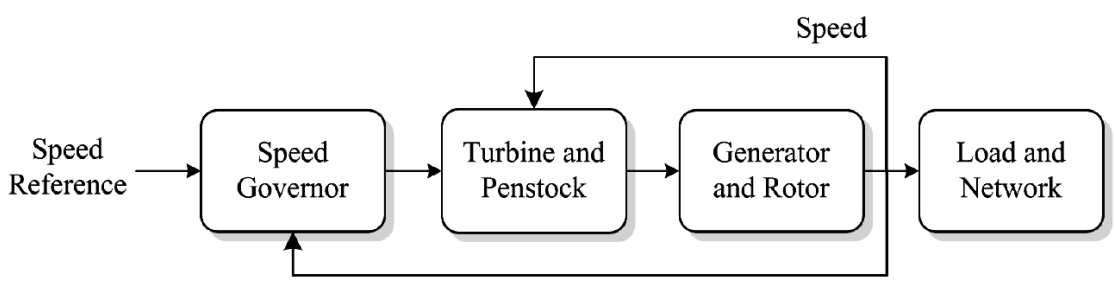

Figure 2: Simplified functional block diagram of hydraulic power plants

Traditional approach in water turbine speed and power control is to use conventional controllers. In Figure 3 the gate servomotor is modeled by a second-order system. The simulation model for speed control of hydro turbine local network operation is shown. The

International Journal of Mechatronics, Electrical and Computer Technology

Vol. 4(11), Apr, 2014, pp. 628-646, **ISSN**: 2305-0543
Available online at: http://www.aeuso.org

main function of the turbine governor in this mode of operation is to compensate unpredictable load in order to keep the frequency on its nominal value. In order to obtain a zero steady state error in the case of load disturbance rejection an integral control low has to be used [12, 13].

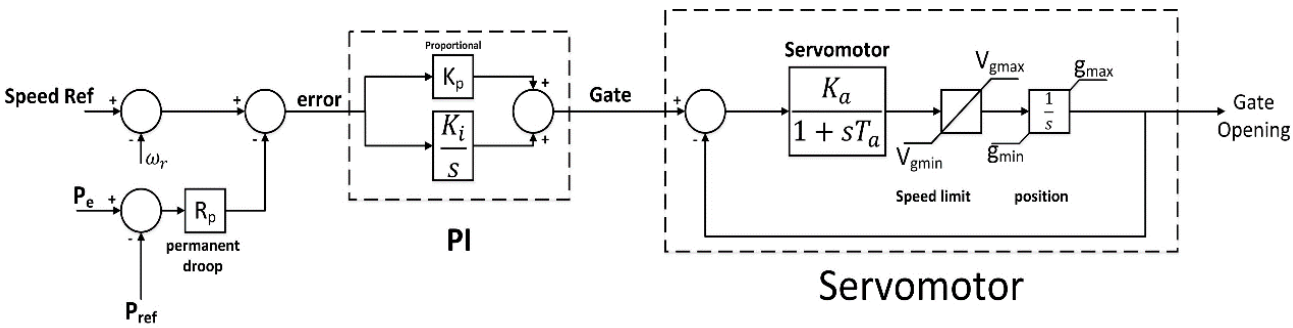

Figure 3: Governor Block implements, a PI governor system, and a servomotor

Appropriate nonlinear model is required for large signal time domain simulations such as islanding, load rejection, system restoration, etc. Hydrodynamics and mechanic electric dynamics are included in nonlinear models. This type of modeling is especially important for hydro power plants with long penstock. The non-linearity of the model is due to the valve characteristic of the turbine. Nonlinear models can be generally represented by the block diagram shown in Figure 4 [7].

International Journal of Mechatronics, Electrical and Computer Technology

Vol. 4(11), Apr, 2014, pp. 628-646, **ISSN**: 2305-0543
Available online at: http://www.aeuso.org

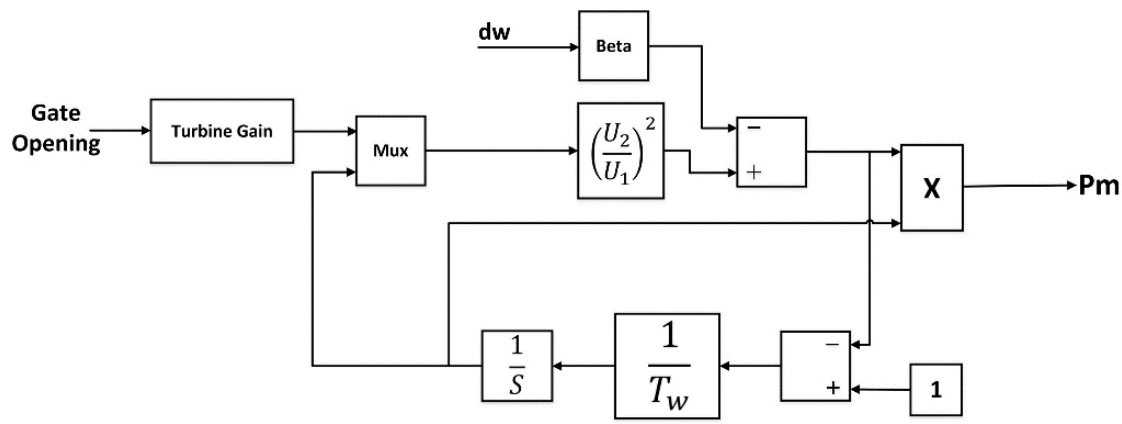

Figure 4: The hydraulic turbine is modeled by the following nonlinear system

Water Starting Time (T_w), it stands for the time required for a head H_0 to accelerate the water flow in the penstock from standstill to U_0. This time can be calculated by the following equation:

$$T_w = \frac{LU_0}{a_g H_0} \tag{5}$$

Therefore, T_w varies with operating point. Its value mainly depends on U_0, because other parameters remain almost unchanged. Typical values of T_w vary between 0.5s and 4.0s [12].

3.1. Steam Turbine and Governor

Six common steam system configurations are No reheat; Tandem Compound, Single Reheat; Tandem Compound, Double Reheat; Two models, Cross Compound, Single Reheat; and Cross Compound, Double Reheat. Steam system configuration in this paper is Tandem Compound, Double Reheat and shown in Figure 5. Corresponding mathematical models are shown in Figure 6.

International Journal of Mechatronics, Electrical and Computer Technology

Vol. 4(11), Apr, 2014, pp. 628-646, **ISSN**: 2305-0543
Available online at: http://www.aeuso.org

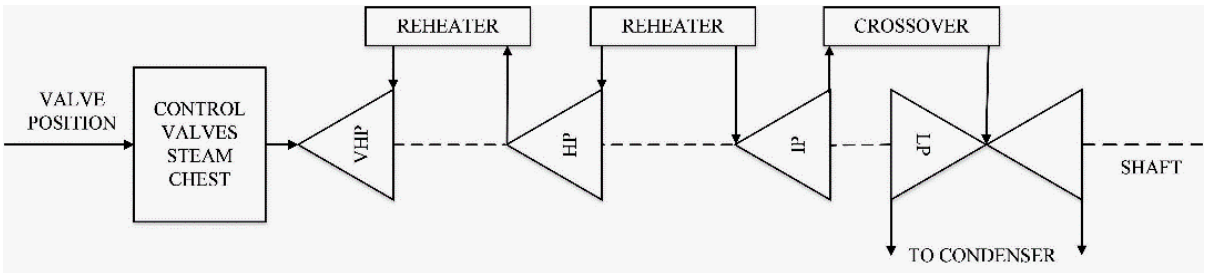

Figure 5: Steam System Configuration

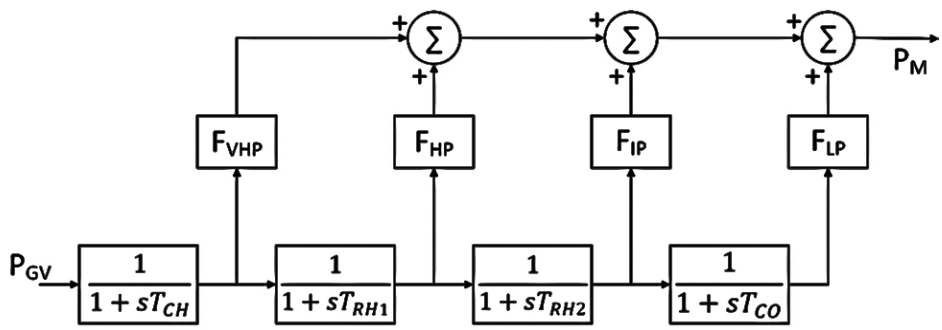

Figure 6: Approximate Linear Model

The time constants T_{CH}, T_{RH}, and T_{CO} represent delays due to the steam chest and inlet piping, repeaters, and crossover piping respectively. The fractions F_{VHp}, F_{Hp} F_{lp}, and F_{Lp} represent portions of the total turbine power developed in the various cylinders [14]. An electro-hydraulic speed-control mechanism provides flexibility through the use of electronic circuits in place of mechanical components in the low power portions. Figure 7 shows approximate mathematical relation-ships for the speed-governing function of the General Electric EH control system with the steam flow feedback operative.

International Journal of Mechatronics, Electrical and Computer Technology

Vol. 4(11), Apr, 2014, pp. 628-646, **ISSN**: 2305-0543
Available online at: http://www.aeuso.org

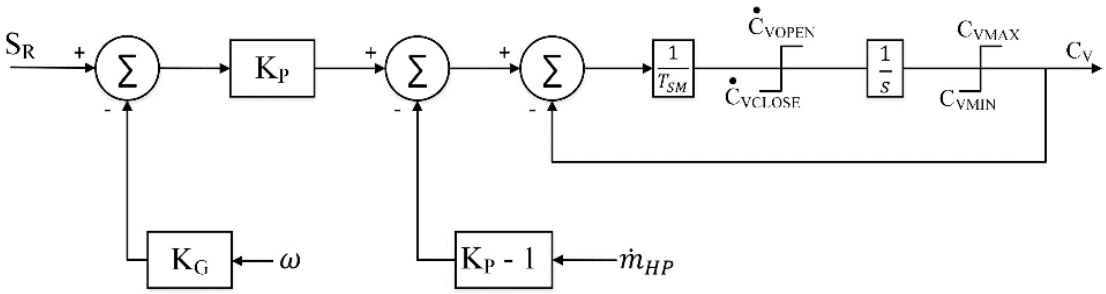

Figure 7: Electro-Hydraulic Speed-Governing Systems for Steam Turbines. Approximate Mathematical Model for General Electric EHC System

3.2. Excitation systems

The excitation system provides the DC voltage to the field winding of the generator and modulates this voltage for control purposes. There are many different configurations and designs of excitation systems. Stability programs usually include a variety of models capable of representing most systems. These models normally include the IEEE standard excitation system models, described in IEEE Standard 421.5 [15]. Reference should be made to that document for a description of the various models and typical data for commonly used excitation system designs. This Exciter can be calculated by the following equations:

$$V_{ti} = \sqrt{V_{qi}^2 + V_{di}^2} \tag{6}$$

$$E_{fdi} = \left(V_{refi} + V_{stabi} - V_{ti}\right)\left(\frac{K_{1i}}{1 + sT_{1i}}\right) + V_{Flo(LF)i} \tag{7}$$

A power system stabilizer (PSS) is frequently, but not always, included in an excitation system. It is designed to modulate the AVR input in such a manner as to contribute damping to inter machine oscillations. The input to the PSS may be generator rotor speed, electrical power, or other signals. The PSS usually is designed with linear transfer functions

International Journal of Mechatronics, Electrical and Computer Technology

Vol. 4(11), Apr, 2014, pp. 628-646, **ISSN**: 2305-0543
Available online at: http://www.aeuso.org

whose parameters are tuned to produce positive damping for the range of oscillation frequencies of concern. It is important that reasonably correct values be used for these parameters. The output of the PSS is limited, usually to ±5% of rated generator terminal voltage, and this limit value must be included in the model [15]. The primary objective of a PSS is to introduce a component of electrical torque in the synchronous machine rotor that is proportional to the deviation of the actual speed from the synchronous speed. When the rotor oscillates, this torque acts as a damping torque to counter the oscillation. The most commonly used structure of a PSS is shown in Figure 8. This comprises a gain, phase compensation blocks, a washout filter, and torsional filters when there are speed and frequency inputs [3].

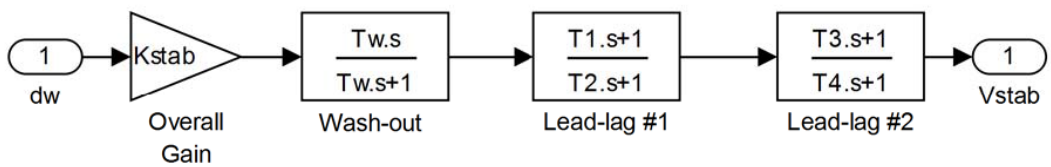

Figure 8: A commonly used structure of PSS

The dynamic response of the PSS is modeled by the following equation:

$$V_{pssi} = K_{pssi} \frac{sT_w(1+sT_{1i})(1+sT_{3i})}{(1+sT_w)(1+sT_{2i})(1+sT_{4i})} \tag{8}$$

International Journal of Mechatronics, Electrical and Computer Technology

Vol. 4(11), Apr, 2014, pp. 628-646, **ISSN**: 2305-0543
Available online at: http://www.aeuso.org

4. Studied System

In this paper, a typical power system with 4 synchronous generators and 11 bus as shown in Figure 9 was selected. The system parameters are given in [7]. All four generators are represented using the exciter system with PSS. G1 and G2 have hydro-turbine and governor and G3, and G4 include steam-turbine and governor. The PI controllers tuned parameters shown in the paper Appendix.

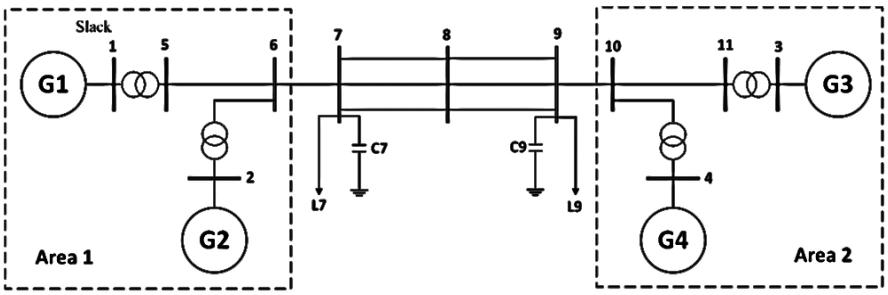

Figure 9: Power system configuration for the power system

5. Model Bank

Disturbances considered to examine the proposed approach include change in the nature of the loads. Corresponding to each of the post-disturbance operating conditions, different linearized models of the system were obtained. Ideally, each of them should have been included in the model bank. Four most probable models, in terms of their likelihood to represent the actual system response, were used [9]. For model bank we used classical model of synchronous machine shown in Figure 10

International Journal of Mechatronics, Electrical and Computer Technology

Vol. 4(11), Apr, 2014, pp. 628-646, **ISSN**: 2305-0543
Available online at: http://www.aeuso.org

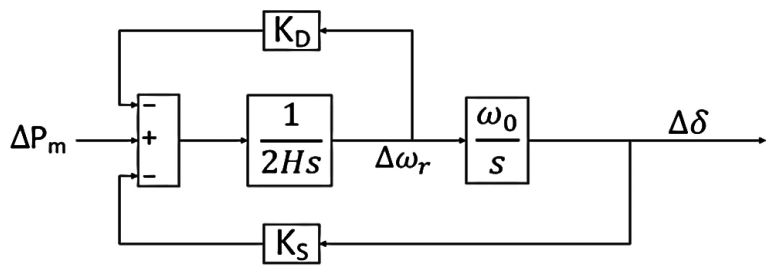

Figure 10: Classical model of synchronous machine

This Classical model can be calculated by the following equations [16]:

$$\dot{E}'_{qi} = \frac{1}{\tau'_{d0i}}\left(E'_{fdi} - E'_{qi} - \left(X_{di} - X'_{di}\right)I_{di}\right) \tag{9}$$

$$P_{ei} = \frac{E'_{qi}V_{ti}}{X'_{di}}\sin\delta_i \tag{10}$$

$$\frac{d\Delta\omega_i}{dt} = \frac{1}{2H_i}\left(\Delta P_{mi} - \Delta P_{ei}\right) \tag{11}$$

$$\Delta\bar{P}_{ei} = K_{si}\Delta\delta i + K_{Di}\Delta\bar{\omega}_{ri} \tag{12}$$

$$\Delta P_{ei}\left(\delta_i, \bar{\omega}_{ri}\right) = \frac{\partial P_{ei}}{\partial_{\delta i}}\Big|_{\omega 0}^{\delta 0}\Delta\delta i + \frac{\partial P_{ei}}{\partial_{\omega_{ri}}}\Big|_{\omega 0}^{\delta 0}\Delta\bar{\omega}_{ri} \tag{13}$$

$$K_{si} = \frac{E'_{qi}V_{ti}}{X'_{di}}\cos\delta_i \tag{14}$$

Four probable system models have been considered for which the operating scenarios and corresponding model identifiers are summarized in Table 1.

International Journal of Mechatronics, Electrical and Computer Technology

Vol. 4(11), Apr, 2014, pp. 628-646, **ISSN**: 2305-0543
Available online at: http://www.aeuso.org

Table 1: Operating conditions used in the model bank

Mode No.	K_S (Classical machine model)				Set Point (%)	
	G_1	G_2	G_3	G_4	L_1	L_2
1	2.688	2.767	2.046	2.251	30	60
2	2.829	2.691	2.399	2.989	10	40
3	3.393	2.799	2.399	2.491	20	130
4	3.455	2.806	2.453	2.609	150	40

6. Test Case

That a conventional controller designed and tuned based on the model proportional (PI), is not necessarily insured to meet the desired efficiency specification for other models. Therefore, some mechanism needs to be devised for on-line identification of the unknown dominant dynamics following a disturbance and switch to an appropriately weighted combination of the controllers. The controller related to model corresponding to the dominant post disturbance dynamics should be selected with maximum weight [3]. For the machines of the power system shown in Figure 9, dynamic condition is applied in the form of a %50 load reduction at the t=1s at the seventh bus and a %50 load reduction at the t=20s at the ninth bus, clearing at t=60s. The objective was to see whether and how quickly the adopted MMAC algorithm could identify the dominant post disturbance dynamics and switch to the appropriate controller to achieve the desired performance.

7. Power System Simulation

Simulations were performed in the MATLAB/SIMULINK® using a variable time step of 0.01ms and 45order Dormand-Prince solver. Simulation results for the dynamic behavior of the system in response to the disturbance described previously, for MMAC controllers, PI

International Journal of Mechatronics, Electrical and Computer Technology

Vol. 4(11), Apr, 2014, pp. 628-646, **ISSN**: 2305-0543
Available online at: http://www.aeuso.org

controllers and without controllers are shown in Figures 14 and 15. Also variation of the weights corresponding to each model is shown in Figure 16.

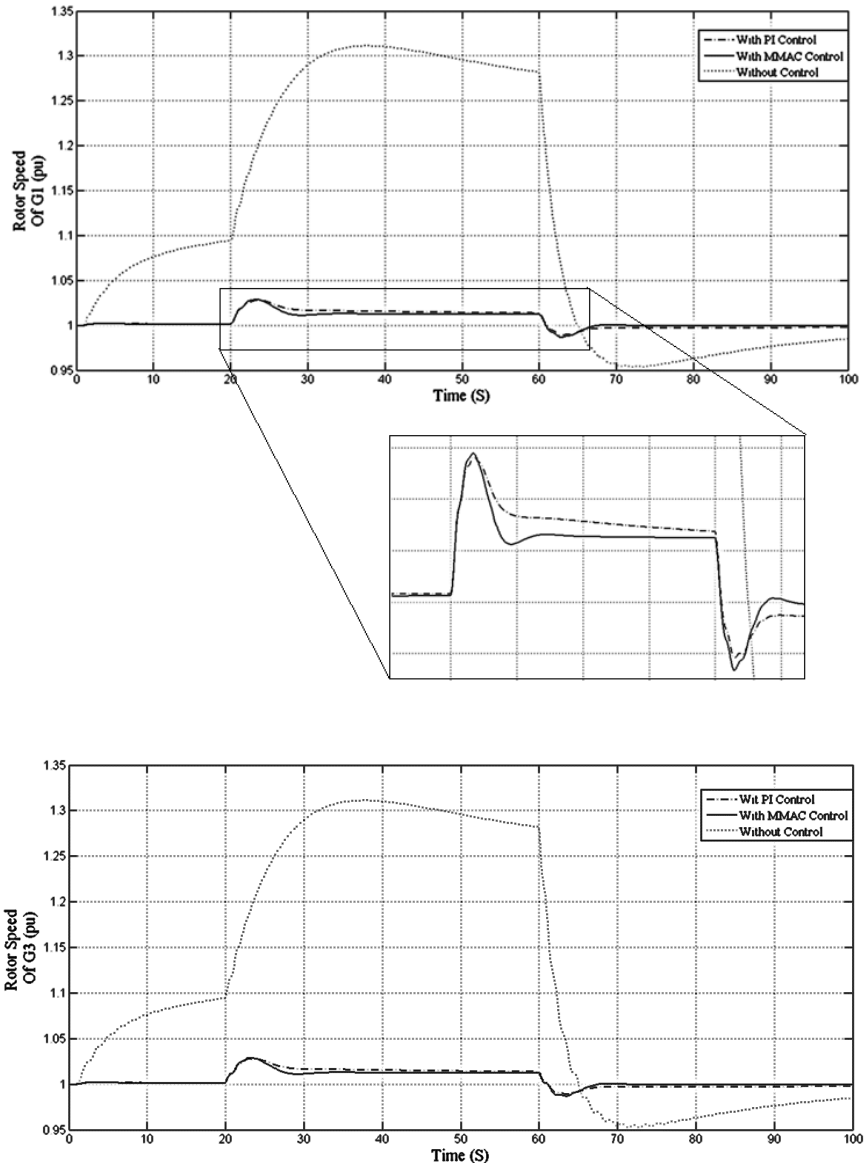

Figure 14: Machines rotor speeds with MMAC, PI and without controller for the power system

International Journal of Mechatronics, Electrical and Computer Technology

Vol. 4(11), Apr, 2014, pp. 628-646, **ISSN**: 2305-0543
Available online at: http://www.aeuso.org

Simulation results show that the MMAC design is able to know the overcoming dynamics after disturbance and switch in the suitable controller without any previous knowledge about the characteristic operating position. The weights corresponding to the other planned controllers exponentially toward the cutting surface is at least weakened. This would ensure that system performance is very close to the optimal mode; the probability that the dynamic behavior disorder of the system is quite likely to be controlled by one of the models in the bank

Conclusion

In this paper a multiple-model adaptive control (MMAC) method is proposed in order to improve dynamic stability of a hydro-turbo multi-machine power system during a sudden changes in the system loads. The MMAC algorithm could identify the dominant post disturbance dynamics and switch to the appropriate controller to achieve the desired performance. It produces proper control signals for generator exciters as well as generator governors. Some simulation results are presented in order to verify the validity and effectiveness of the proposed control approach. The control scheme worked satisfactorily following possible disturbances without any previous knowledge about the post disturbance dynamics.

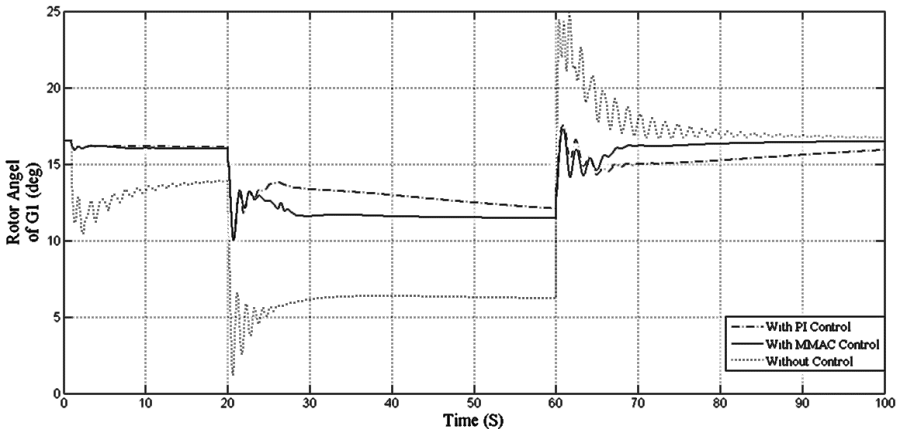

International Journal of Mechatronics, Electrical and Computer Technology

Vol. 4(11), Apr, 2014, pp. 628-646, **ISSN**: 2305-0543
Available online at: http://www.aeuso.org

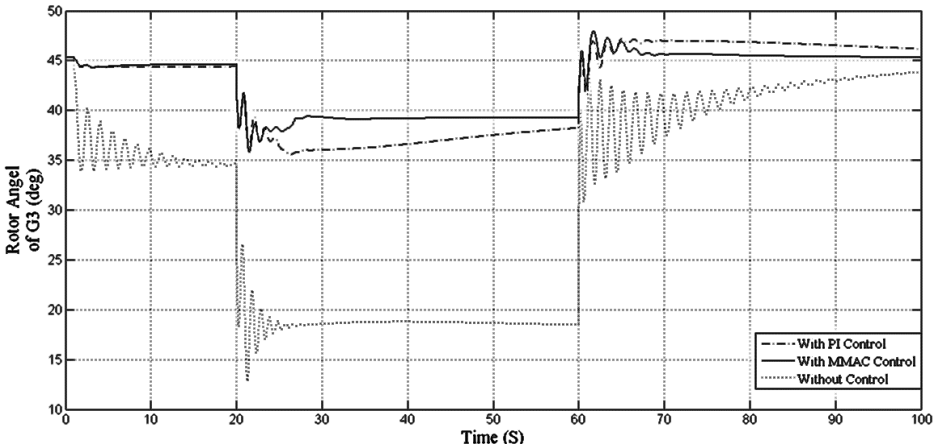

Figure 15: Machines rotor speeds with MMAC, PI and without controller for the power system

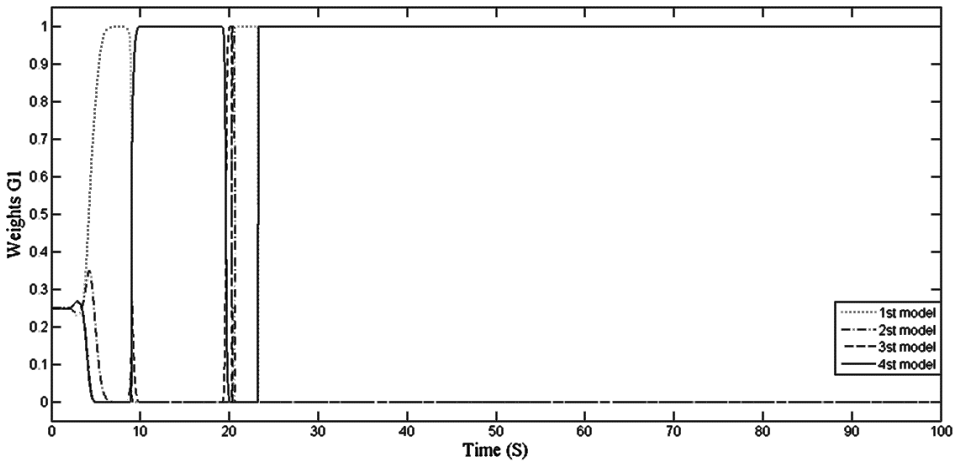

Figure 16: Variation of the Computed weights

International Journal of Mechatronics, Electrical and Computer Technology

Vol. 4(11), Apr, 2014, pp. 628-646, **ISSN**: 2305-0543
Available online at: http://www.aeuso.org

Appendix

PI controllers tuned parameters

Units		G_1				G_2				G_3				G_4			
Mode No.		1	2	3	4	1	2	3	4	1	2	3	4	1	2	3	4
PI controller for exciter	K_a	200	221	183	205	200	221	183	205	180	200	190	195	180	200	190	195
	T_a	0.01	0.007	0.015	0.009	0.01	0.007	0.015	0.009	0.005	0.003	0.01	0.007	0.005	0.003	0.01	0.007
PI controller for turbine	K_p	1.5	0.65	1.35	1.55	1.5	0.65	1.35	1.55	1	3	0.8	2.2	1	3	0.8	2.2
	K_i	2.7	3	2.5	2.5	2.7	3	2.5	1.5	-	-	-	-	-	-	-	-
	T_{sm}	-	-	-	-	-	-	-	-	0.2	0.3	0.15	0.2	0.3	0.15	0.24	0.2

References

[1] EP. de Mello, and C. Concordia, “Concepts of synchronous machine stability as affected by excitation control”, IEEE Transactions on Power Apparatus and Systems, Vol. 88, 5 (1969), pp.317-329.

[2] E.V. Larsen, and D.A. Swann, “Applying power system stabilizers”, IEEE Transactions on Power Apparatus and Systems, PAS-100, 6 (1981), pp. 3017-3046.

[3] B. Pal, and B. Chaudhuri, “Robust Control in Power Systems”, Springer Science + Business Media, Inc., (2005).

[4] A. Cezayirli, K. Ciliz, "Multiple model based adaptive control of a DC motor under load changes," Proceedings of the IEEE International Conference on Mechatronics (2004), pp.328,333.

[5] D.G.Lainiotis, “Partitioning: A unifying framework for adaptive systems”. Control. Proceedings of IEEE, Vol. 64, 8 (1976), pp. 1182-1 198.

Lainiotis, D.G., "Partitioning: A unifying framework for adaptive systems, I: Estimation," *Proceedings of the IEEE* , vol.64, no.8, pp.1126,1143, Aug. 1976

Vol. 4(11), Apr, 2014, pp. 628-646, **ISSN**: 2305-0543
Available online at: http://www.aeuso.org

[6] K. S. Narendra and J. Balakrishnan, "Improving Transient Response of Adaptive Control Systems Using Multiple Models and Switching", IEEE Transactions on Automatic Control, Vol. 39, 9(1994), pp. 1861-1866.

[7] P. Kundur, "Power System Stability and Control", McGraw-Hill, New York, (1994).

[8] K.J. Astrom and B. Wittenmark. "Adaptive Control", Addison-Wesley Publishing Company, 2nd Ed. (1995).

[9] B. Pal, and B. Chaudhuri, "Application of Multiple-Model Adaptive Control Strategy for Robust Damping of Inter-area Oscillations in Power System", IEEE Transactions on Control Systems Technology, Vol. 12, 5 (2004), pp. 727 – 736.

[10] Z. Miao, L. Fan, "Hydraulic Turbine and Turbine Control Models for Dynamic Studies," IEEE Transactions on Power Systems, Vol.7, 1(1992), pp. 167-179.

[11] R.R. Rao, B. Aufderheide, and B.W. Bequette, "Experimental studies on multiple-model predictive control for automated regulation of hemodynamic variables". IEEE Transactions on Biomedical Engineering, Vol. 50, 3(2003), pp.277-288.

[12] R. A. Naghizadeh, S. Jazebi, "Modeling Hydro Power Plants and Tuning Hydro Governors as an Educational Guideline", International Review on Modelling and Simulations, Vol. 5, 4(2012).

[13] T. Puleva, and A.Ichtey, "Adaptive multiple model algorithm for hydro generator speed and power control", AT&P journal, (2008), pp. 1-6.

[14] IEEE committee report. "Dynamic models for steam and hydro turbines in power system studies," IEEE Transactions on Power Apparatus and Systems, 6(1973), pp.1904-1915.

[15] 'IEEE Recommended Practice for Excitation System Models for Power System Stability Studies', IEEE Standard 421.5., (1992).

[16] K.R. Padiyar, "Power System Dynamics Stability and Control", BS Publications, 2nd Ed., (2008).