International Journal of Mechatronics, Electrical and Computer Technology

Vol. 4(12), Jul, 2014, pp. 1328-1352, **ISSN**: 2305-0543
Available online at: http://www.aeuso.org

Design and Analysis of EMI and RFI Suppressor for High Frequency Full Bridge Resonant Inverter Fitted Induction Heater

Pradip Kumar Sadhu[1], Debabrata Roy[2], Nitai Pal[1], Sourish Sanyal[3]

[1]Electrical Engineering Department, Indian School of Mines (under MHRD, Govt. of India), Dhanbad - 826004, India

[2]Department of Electrical Engineering, Seacom Engineering College, Howrah-711302, India

[3]Department of Electronics and Communication Engineering, Academy of Technology, Academy of Technology, Hooghly, India

*Corresponding Author's E-mail: *pradip_sadhu@yahoo.co.in*

Abstract

This paper presents the design and analysis of EMI and RFI suppressor using PSIM for full-bridge resonant inverter based induction heating equipment. With the growing use of high frequency inverters in induction heating equipment, the problem of injected harmonics becomes critical. These harmonics require the connection of low pass filters between the inverter and the power supply network. The design is according to the harmonics standards that determine the level of current harmonics injected into the power supply network. To reduce the radiated and conducted interference from electronic equipment to moderate level United States and international standards for EMI-RFI have been established. FCC Docket 20780 is the document which serves as the guide in the United States. Internationally acknowledged document is the West Germany Verband Deutscher Elecktronotechniker (VDE) safety standards. So it is clear that both the FCC and VDE standards exclude subassemblies from agreement to the rules; rather, the final equipment i.e. the switching power supply must abide by the EMI-RFI specification. The input filter of the switching power supply is matched with the power supply when connected with passive loads. The characteristics and suppression capabilities may drastically change when used to power active high frequency electronic circuits. In this paper an attempt is made by the authors to

International Journal of Mechatronics, Electrical and Computer Technology

Vol. 4(12), Jul, 2014, pp. 1328-1352, **ISSN**: 2305-0543
Available online at: http://www.aeuso.org

introduce the reader with the conducted RFI problem. Some methods are also suggested by the authors to reduce the interference problem both for the application in a power supply system of high frequency resonant full bridge inverter fitted induction heating equipment. Also a simulated analytical comparison has been made between two induction heating equipment's including and excluding the EMI and RFI suppressor.

Keywords: EMI, RFI, Suppressor, Resonant Inverter, PSIM, LPF, Induction Heating.

1. Introduction

The contribution of high frequency induction heating equipment is anticipated to grow rapidly in the near future. New regulations and recommendations are needed for high frequency induction heating equipment. Moreover, new practical solutions are essential to make the power supply of induction heating equipment viable [1-5]. The need for inverters in induction heating has clarified the significance of high frequency operation. This high frequency switching operation effects the grid voltage distortion which leads to poor power quality. A well designed filter can attenuate the problem due to harmonics. The passive filter not only affects inverter harmonic injection but impacts on the harmonics produced by a coupled non-linear load. There are several techniques for controlling harmonic current flow, such as magnetic flux compensation, harmonic current injection, DC ripple injection, series and parallel active filter systems. Passive harmonic filters are often used to reduce voltage harmonics and current distortion in power[6-10]. The harmonic currents injected by a high frequency inverter can be classified as (i) Switching frequency harmonics and (ii) High frequency harmonics. Each category harmonic must be sufficiently and appropriately attenuated. The current harmonics generated, if injected into the grid, can cause the malfunction of sensitive apparatus connected to the same bus. According to the harmonic standards, which determine the level of current harmonics injected into the power supply

International Journal of Mechatronics, Electrical and Computer Technology
Vol. 4(12), Jul, 2014, pp. 1328-1352, **ISSN**: 2305-0543
Available online at: http://www.aeuso.org

network, the power filter should attenuate the harmonics to specific levels. Inverters for induction heating equipment will need to incorporate interface filters to attenuate the injection of current harmonics [11-14]. Both the FCC and VDE are concerned with RFI suppression generated by equipment connected to the ac mains employing high frequency digital circuitry. The VDE has subdivided its RFI regulations into two categories, the first being unintentional high frequency generation by equipment with rated instructions frequencies from 0 to 10 kHz, i.e. VDE –0875 and VDE-0879, and the second dealing with intentional high frequency generation by equipment using frequencies above 10khz,i.e., VDE0871 and VDE0872. The FCC on the other hand includes in its RFI regulations all electronic devices and system, which generate and use timing signals or pulse at a rate greater than 10 kHz. Fig. 1 summarizes the FCC and VDE RFI requirements. The FCC EMI-RFI regulations closely follow those of the VDE.

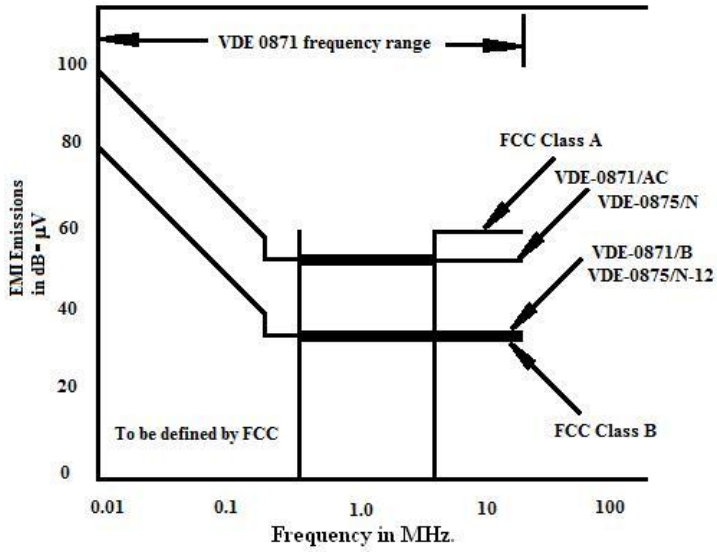

Figure 1: FCC and VDE Curves For Conducted RFI Emissions

The FCC class A specification covers business, commercial and industrial environment and compliance to the specified EMI emission in decibel – □V (micro volt) can be met by

International Journal of Mechatronics, Electrical and Computer Technology

Vol. 4(12), Jul, 2014, pp. 1328-1352, **ISSN**: 2305-0543
Available online at: http://www.aeuso.org

any equipment meeting VDE-0875/N or VDE-0871/A,C. On the other hand, FCC class B requirements cover residential environment and are more stringent than those of class A. both FCC conducted EMI-RFI specifications, however, cover the frequency range from 450 kHz to 30 MHz. The VDE regulations extend below the 450 kHz range; in fact the VDE frequency range for EMI-RFI conducted emission covers a spectrum from 10 kHz to 30 MHz. Fig. 2 shows the FCC and VDE curves for conducted RFI emissions.

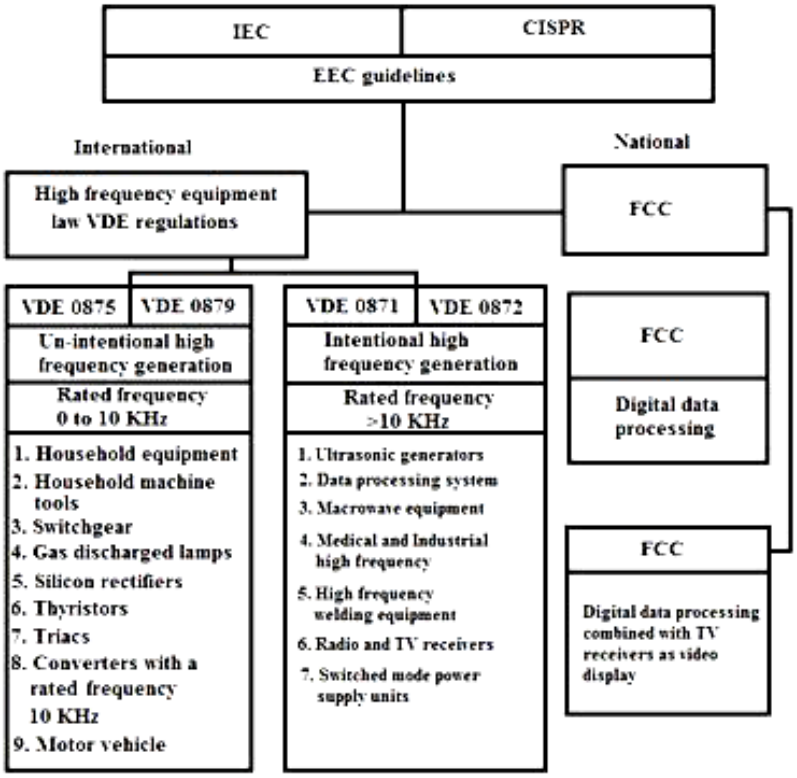

Figure 2: Summarization of FCC and VDE RFI Requirements

2. Noise Remedial Process using Filter

A filter is a network that provides perfect transmission for signal with frequencies in certain pass-band region and infinite attenuation in the stop-band regions. Such

International Journal of Mechatronics, Electrical and Computer Technology

Vol. 4(12), Jul, 2014, pp. 1328-1352, **ISSN**: 2305-0543
Available online at: http://www.aeuso.org

ideal characteristics cannot be attained, and the goal of filter design is to approximate the ideal requirements to within an acceptable tolerance. Filters are used in all frequency ranges and are categorized into three main groups i.e. Low-pass filter (LPF), High-pass filter (HPF) and Band-pass filter (BPF). Low-pass filter (LPF) transmits all signals between DC and some upper limit ωc and attenuates all signals with frequencies above ωc. This prevents the injection of unwanted harmonics generated from the high frequency inverter of induction heating equipment [15-21].

The characteristic of a passive filter can be described using the transfer function approach or the attenuation function approach. In low frequency circuit the transfer function (H(ω)) description is used while at microwave frequency the attenuation function description is preferred. The characteristics of low pass passive filter is shown in Fig. 3.

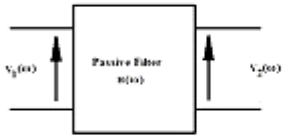

$$H(\omega) = \frac{V_2(\omega)}{V_1(\omega)}$$

$$Attenuation = -20\log_{10}\left(\left\|\frac{V_2(\omega)}{V_1(\omega)}\right\|\right)$$

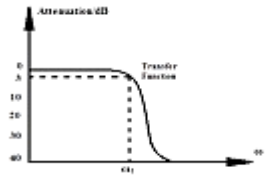

Figure 3: Low Pass Filter Frequency Response

International Journal of Mechatronics, Electrical and Computer Technology

Vol. 4(12), Jul, 2014, pp. 1328-1352, **ISSN**: 2305-0543
Available online at: http://www.aeuso.org

3. Realization of Filters

At frequency below 160 kHz, filters are usually implemented using lumped elements such as resistors, inductors and capacitors. For active filters, operational amplifier is sometimes used. There are essentially two low-frequency filter synthesis techniques in common use. These are referred to as the image-parameter method (IPM) and the insertion-loss method (ILM). The image-parameter method provides a relatively simple filter design approach but has the disadvantage that an arbitrary frequency response cannot be incorporated into the design. The IPM approach divides a filter into a cascade of two-port networks and attempt to come up with the schematic of each two-port, such that when combined, give the required frequency response. The insertion-loss method begins with a complete specification of a physically realizable frequency characteristic, and from this a suitable filter schematic is synthesized. Again we will ignore the image parameter method and only concentrate on the insertion loss method, whose design procedure is based on the attenuation response or insertion loss of a filter. The insertion loss of a two port network is given by:

$$P_{IL} = \frac{P_{inc}}{P_{load}} = \frac{1}{1-\left|\Gamma(\omega)^2\right|}$$

Where, Γ is the reflection coefficient looking into the filter (we assume no loss in the filter). Design of a filter using the insertion-loss approach usually begins by designing a normalized low-pass filter (LPF). The LPF is a low-pass filter with source and load resistance of 1Ω and cutoff frequency of 152 KHz[22-24].

International Journal of Mechatronics, Electrical and Computer Technology

Vol. 4(12), Jul, 2014, pp. 1328-1352, **ISSN**: 2305-0543

Available online at: http://www.aeuso.org

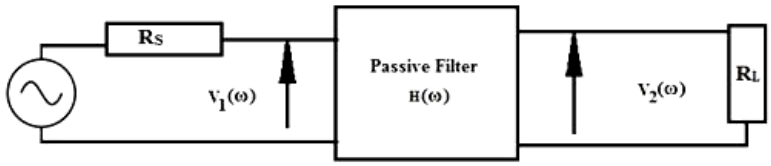

Figure 4: A Normalized LPF Filter Network with Unity Cutoff Frequency (1Radian/S).

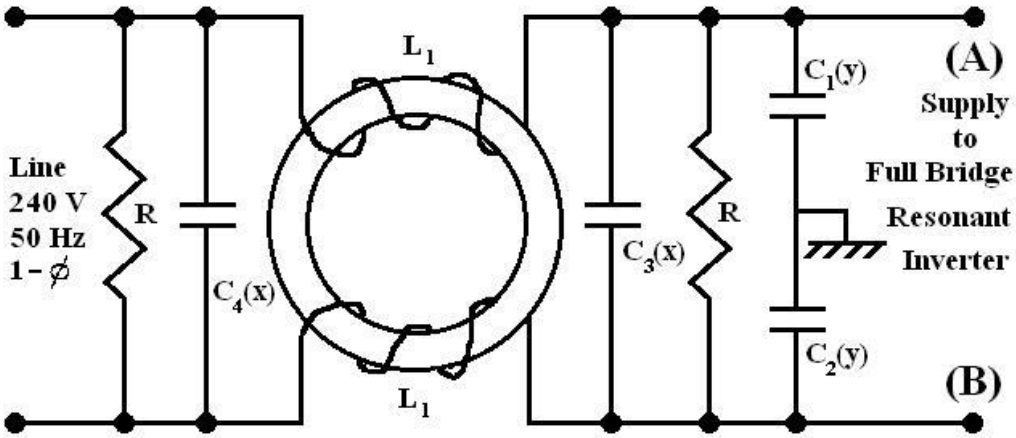

Figure 5: Developed Low Pass Real Time Filter Model Using RLC Elements

Low-pass filter (LPF) filters have the form shown in Figure 6. The network consists of reactive elements forming a ladder, usually known as a ladder network. The order of the network corresponds to the number of reactive elements.

International Journal of Mechatronics, Electrical and Computer Technology

Vol. 4(12), Jul, 2014, pp. 1328-1352, **ISSN**: 2305-0543

Available online at: http://www.aeuso.org

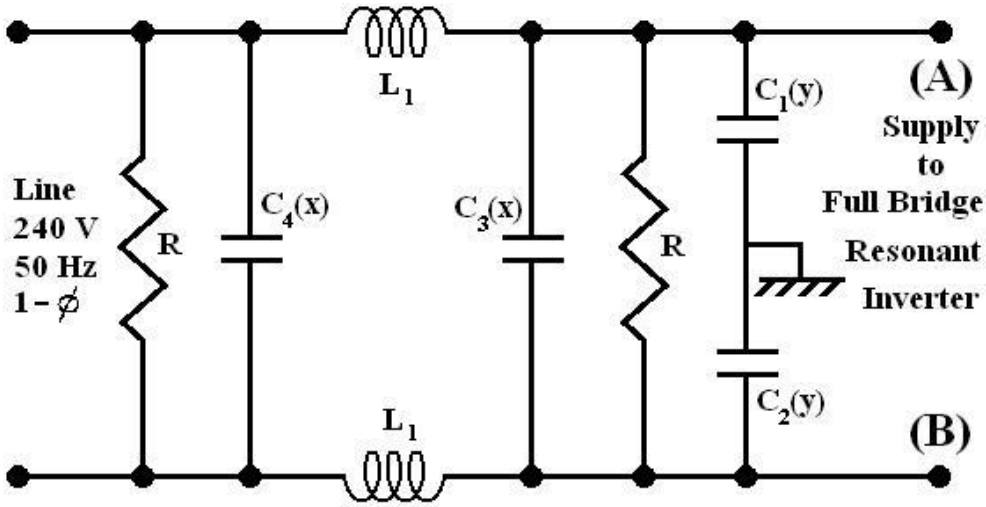

Figure 6: An input ac line filter of full bridge inverter power supply for RFI noise suppression.

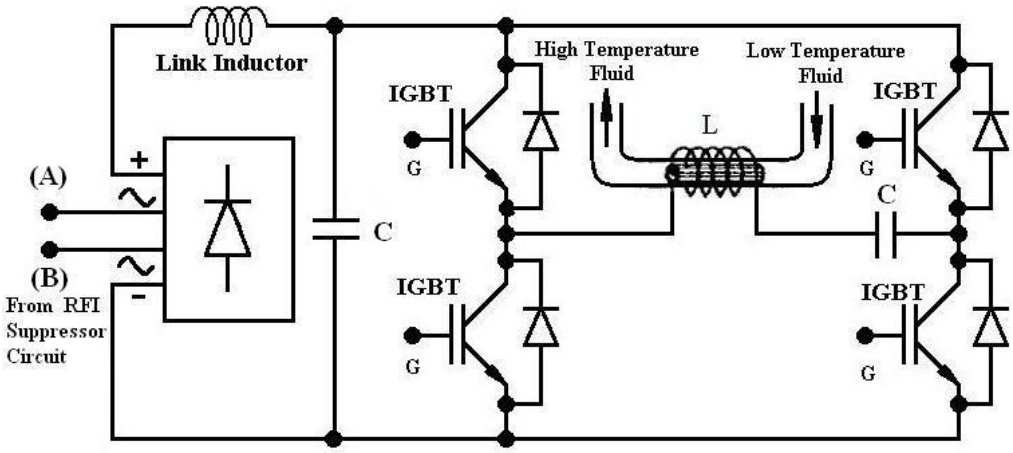

Figure 7:.Full bridge inverter fitted induction heating equipment

4. Design and Analysis of a Low Pass Filter(LPF)

The specification of the filter is as follows: RS = 1 kΩ , L=20 μH, C=0.22 μF Cut-off frequency, fc = 152 kHz

International Journal of Mechatronics, Electrical and Computer Technology

Vol. 4(12), Jul, 2014, pp. 1328-1352, **ISSN**: 2305-0543
Available online at: http://www.aeuso.org

4.1. Step 1 – Design the LPF filter with f = 4.83KHz

There is a variety of different filter variants that can be used dependent upon the requirements in terms of in band ripple, rate at which final roll off is achieved, etc. The type used here is the constant-k and this produces some manageable equations:

$$L = Z_0 / (\Pi \times f_c) H$$

$$C = 1 / (Z_0 \times \Pi \times \mathrm{f}_c) F$$

$$f_c = 1 / (\Pi \sqrt{LC}) Hz$$

$$f_c = 1 / (\Pi \sqrt{20 \times 10^{-6} \times 0.22 \times 10^{-6}}) Hz$$

$$= 1.52 \times 10^5 Hz$$

Where,

Zo=characteristic impedance in ohms

C=Capacitance in Farads

L=Inductance in Henries

fc = Cutoff frequency in Hertz

4.2. Step 2 – Perform impedance and frequency scaling

Low pass filters are used in a wide number of applications. Particularly, in radio frequency applications, low pass filters are made in their LC form using inductors and capacitors. Typically, they may be used to filter out unwanted signals that may be present in a band above the wanted pass band. In this way, this form of filter only accepts signals below the cut-off frequency. Low pass filters using LC components, i.e. inductors and capacitors are arranged in either a π or T network. For the π section filter, each section has one series component and either side a component to ground. The T network low pass filter has one component to ground and either side there is a series in line component. In the case

International Journal of Mechatronics, Electrical and Computer Technology

Vol. 4(12), Jul, 2014, pp. 1328-1352, **ISSN**: 2305-0543
Available online at: http://www.aeuso.org

of a low pass filter the series component are inductors and the components to ground are capacitors.

5. RFI Sources in Switching Power Supplies

Every switching power supply is a source of RFI generation because of the very fast rise and fall times of the current and voltage waveforms inherent in the converter operation. The main source of switching noise are the switching transistor, the main rectifier, the output diodes, the protective diodes for the transistor, and of course the control unit itself. Depending upon the topology of the converter used, the RFI noise level at the mains input vary from bad to worse. Fly back converters, which by design have a triangular input current waveform, generate less conducted RFI noise than converters with rectangular input current waveform, such as feed forward or bridge converters. Fourier analysis shows that the amplitude of the high frequency harmonica of a triangular current waveform drop at a rate of 40 decibel per decade, compared to a 20 decibel per decade drop for a comparable rectangular current waveform.

6. RFI AC Input Line Filter for RFI Suppression

Wherever Times Ne The most common method of noise suppression at switching power supply ac mains is the utilization of an LC filter for differential and common mode RFI suppression. Normally a coupled inductor is inserted in series with each ac lines, while capacitor are placed between lines (called X capacitor) and between each line and the ground conductor (called Y capacitor). The capacitance and inductance of the components may be within the following values:

Cx: 0. 1 to 1 μf

Cy: 0. 1 to 1 μf

L1: 1 to 100 μH

International Journal of Mechatronics, Electrical and Computer Technology

Vol. 4(12), Jul, 2014, pp. 1328-1352, **ISSN**: 2305-0543
Available online at: http://www.aeuso.org

During filter components selection it is important to make sure that the resonant [1] frequency of the input filter is lower than the working frequency of the power supply. On the other hand, filtering conducted noise becomes much easier as the working frequency of the power supply is increased. The resistor R across the ac line of the filter is a discharge resistor for the X capacitor and it is recommended by the safety specifications of the VDE-0806 and IEC-380. In fact IEC-380 states that if the RFI. X capacitor is above 0.1μf, a discharge resistor of the following value is required in the circuit.

7. Simulation diagram & result

In this present work, the high frequency Series resonant [1] Full Bridge inverter has been simulated on the PSIM platform with the help of equivalent circuit parameters. At first simulation results are presented without the LP filter. Then simulation results are shown when the LP filter is installed at the input of the equipment. The circuit configuration and waveforms are shown below when simulated in PSIM. Fig. 8 depicts the simulation circuit diagram of the present implemented scheme without the LPF filter at input using PSIM. In Fig. 9, the waveforms of load voltage (VP1) and load current (I1) are shown. From the figure it can be found that significant amount of high frequency components are generated and they are superimposed in the 100 Hz envelope in the two waveforms. In Fig. 10, the waveform of voltage across the load (VP1), voltage across the dc link inductor (VP2) and voltage at the rectifier output (VP3) are shown for the High Frequency Full Bridge Resonant Inverter fitted induction heating[2] equipment without filter. From the figure it can be found that at the output of the rectifier the voltage is of 100 Hz with significant amount of high frequency components superimposed in it. High frequency components are also present in the load voltage and in the voltage across the inductor. Fig. 11 shows the waveform of voltage at the rectifier output (VP3), voltage across the rectifier input (VP4)

International Journal of Mechatronics, Electrical and Computer Technology

Vol. 4(12), Jul, 2014, pp. 1328-1352, **ISSN**: 2305-0543
Available online at: http://www.aeuso.org

and voltage at the transformer secondary (VP4). In Fig. 12, the waveform of the input current (I2) is shown. It can be seen from the figure that very high amount of high frequency components are superimposed on the 50 Hz envelope. Fig. 13 shows RMS value of the input current (I2) for the High Frequency Full Bridge Resonant Inverter fitted induction heating equipment without LP filter. The RMS value of I2 is 4.65 Ampere. Fig. 14 shows the frequency response of input current I1 when analyzed with FFT. Fig. 15 shows the simulation circuit diagram for High Frequency Full Bridge Resonant Inverter fitted induction heating equipment with LP filter. Fig. 16 depicts the waveform of load voltage (VP1) and load current (I1) of the circuit with LP filter at input. Comparing with Fig. 9 it can be found that amount of high frequency components in the two cases are almost same. Fig. 17 shows the waveforms of load voltage (VP1), voltage across dc link inductor (VP2) and voltage across the rectifier output (VP3) when the LP filter is installed at the input of the equipment. Comparing with Fig. 10, it can be seen that in the first case (without filter) the waveforms of the voltage across dc link inductor (VP2) and voltage across the rectifier output (VP3) contain greater amount of harmonics. In Fig. 18, the waveforms of voltage across the rectifier output (VP3) and voltage across the rectifier input (VP7) are shown when the circuit with input filter is simulated. When compared with Fig. 11 it is found that without filter there are greater amount of high frequency components present in the two waveforms. Fig. 19 shows the voltage across the filter inductors (VP5&VP6) and voltage across the transformer secondary (VP4) of the circuit with filter. Fig. 20 shows the input current waveform (I2) for High Frequency Series Resonant Full Bridge inverter fitted induction heating equipment with LP filter on PSIM software. Fig. 21 represents the RMS value of the input current I2 which is 4.27 Ampere. Fig. 22 represents the frequency response of the input current when FFT analysis is done on it. So, it can be concluded that due to high switching frequency operation associated with High Frequency Series Resonant Full Bridge inverter, high frequency harmonics are produced in the load

International Journal of Mechatronics, Electrical and Computer Technology

Vol. 4(12), Jul, 2014, pp. 1328-1352, **ISSN**: 2305-0543
Available online at: http://www.aeuso.org

circuit and tries to flow towards the supply system despite the presence of uncontrolled rectifier. These harmonics when flow towards the supply cause in supply waveform distortion and results in poor power quality. So, to eliminate the harmonics and to maintain good power quality, when the proposed low pass filter is connected at the input the distortion is reduced significantly. By quantitative analysis, it has been shown in the paper that without the input filter, the THD (Total harmonic distortion) of the input current is 48.81%. But when the LP filter is incorporated at the input, the THD of the input current is reduced to 12.48%.

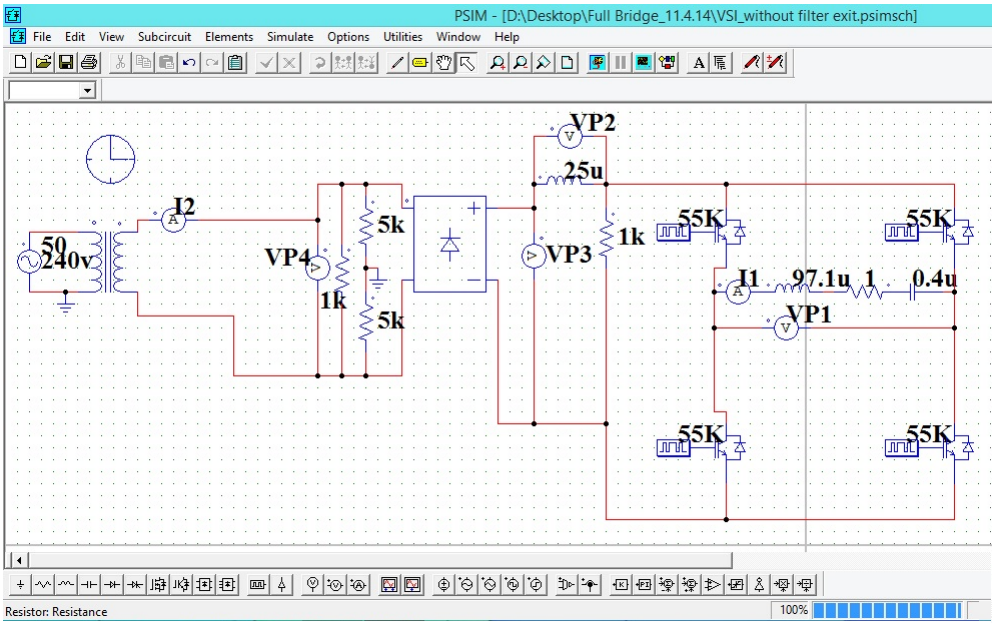

Figure 8: Simulation circuit diagram for High Frequency Series Resonant Full Bridge inverter fitted induction heating equipment without LP filter using PSIM software.

International Journal of Mechatronics, Electrical and Computer Technology

Vol. 4(12), Jul, 2014, pp. 1328-1352, **ISSN**: 2305-0543

Available online at: http://www.aeuso.org

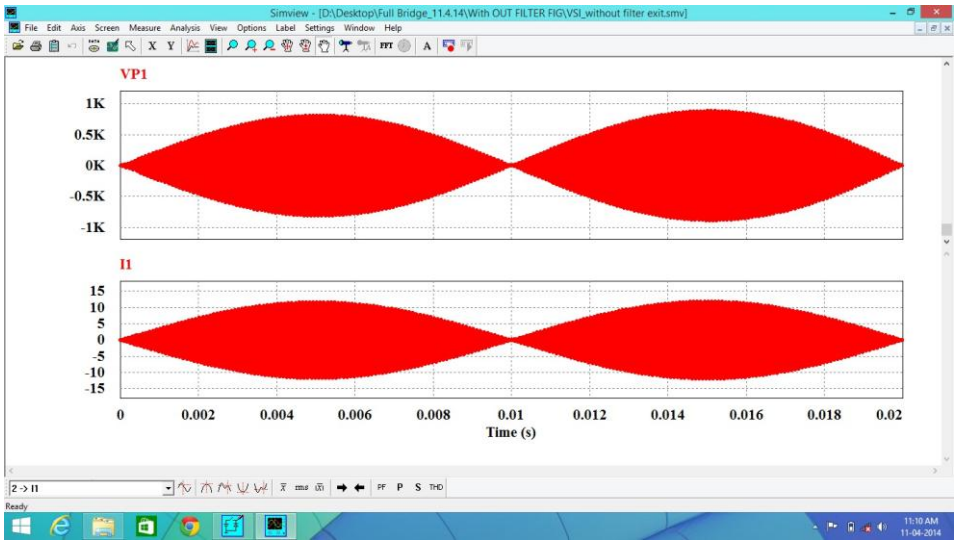

Figure 9: Waveform of load voltage (VP1) and load current (I1) for the High Frequency Full Bridge Resonant Inverter fitted induction heating equipment without LP filter using PSIM software.

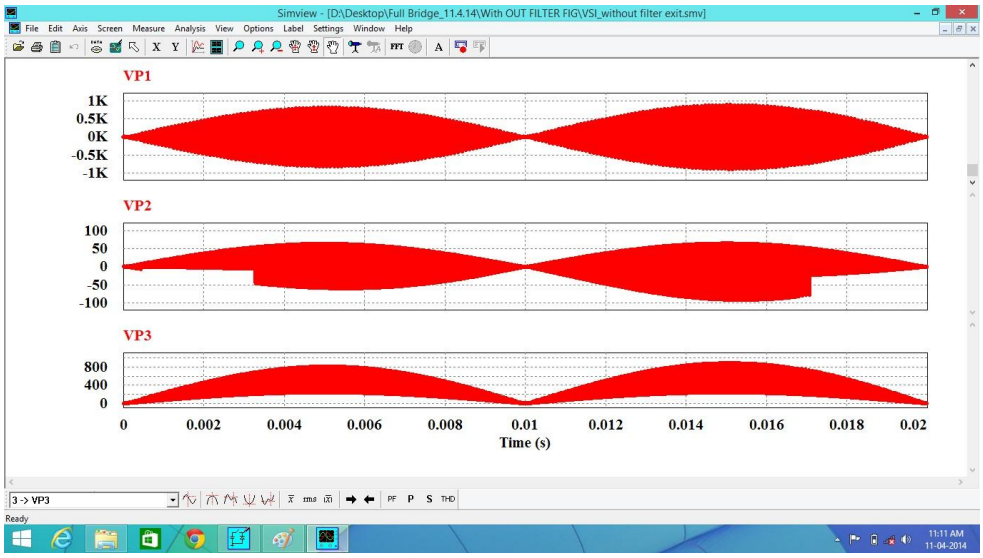

Figure 10: Waveform of load voltage (VP1), voltage across dc link inductor (VP2) and voltage across the rectifier output (VP3) for the High Frequency Full Bridge Resonant Inverter fitted induction heating equipment without LP filter using PSIM software.

International Journal of Mechatronics, Electrical and Computer Technology

Vol. 4(12), Jul, 2014, pp. 1328-1352, **ISSN**: 2305-0543

Available online at: http://www.aeuso.org

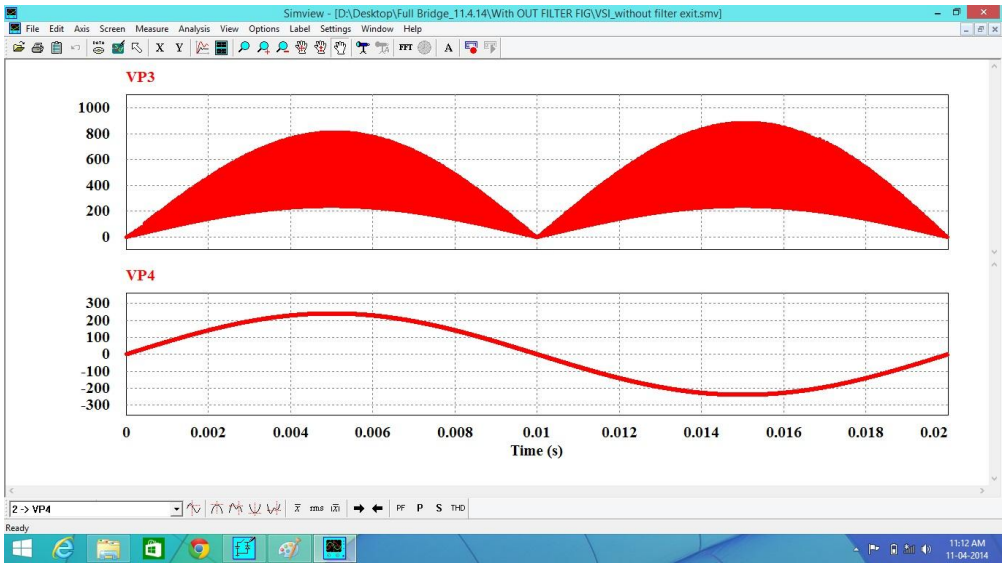

Figure 11: Waveform of voltage across the rectifier output (VP3) and voltage across the rectifier input (VP4) and voltage across the transformer secondary (VP4) for the High Frequency Full Bridge Resonant Inverter fitted induction heating equipment without LP filter using PSIM software.

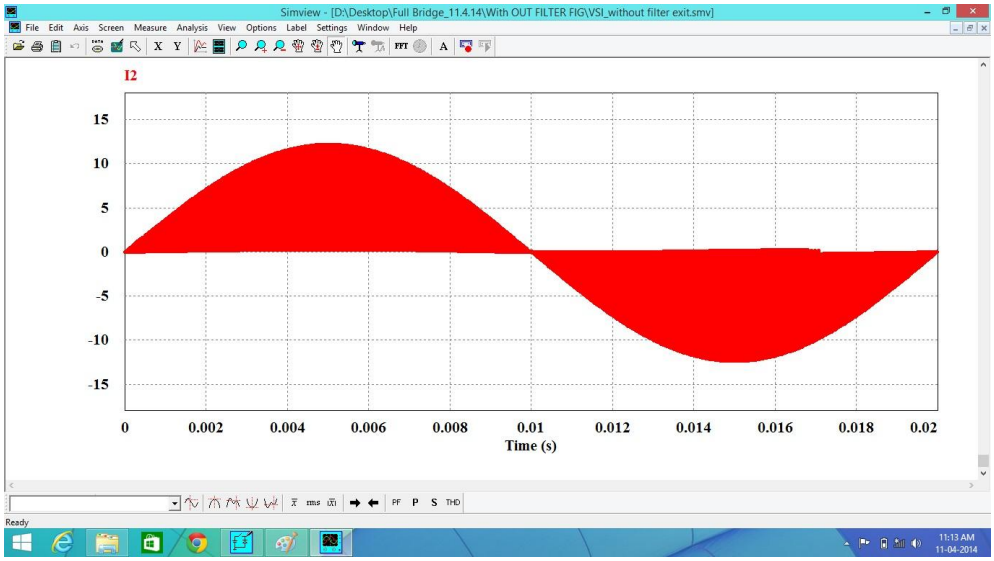

Figure 12: Waveform of input current (I2) for the the High Frequency Full Bridge Resonant Inverter fitted induction heating equipment without LP filter using PSIM software.

International Journal of Mechatronics, Electrical and Computer Technology

Vol. 4(12), Jul, 2014, pp. 1328-1352, **ISSN**: 2305-0543

Available online at: http://www.aeuso.org

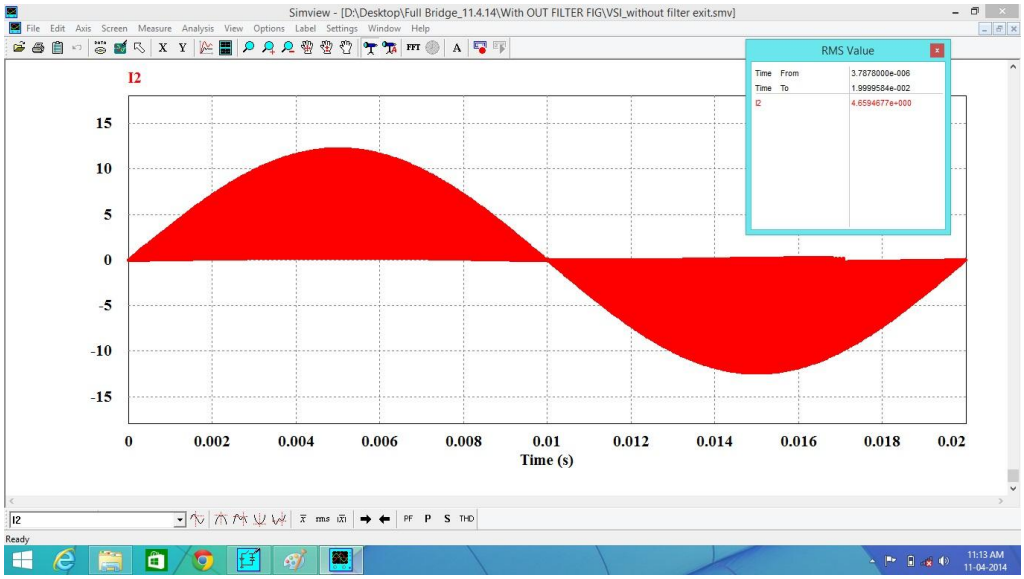

Figure 13: RMS value of input current (I2) for the High Frequency Full Bridge Resonant inverter fitted induction heating equipment without LP filter on PSIM software.

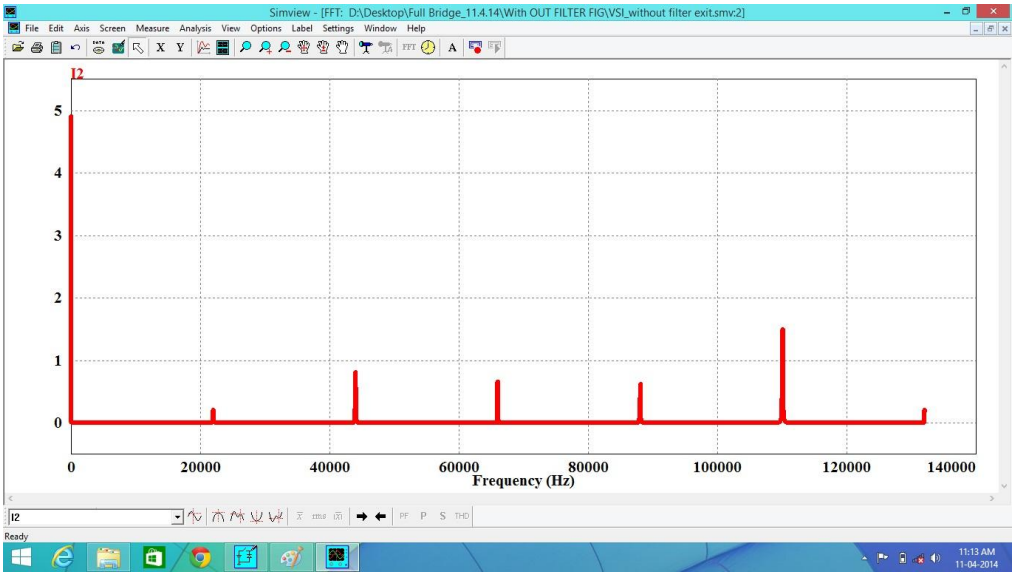

Figure 14: FFT of input current (I2) for the High Frequency Full Bridge Resonant inverter fitted induction heating equipment without LP filter using PSIM software.

International Journal of Mechatronics, Electrical and Computer Technology

Vol. 4(12), Jul, 2014, pp. 1328-1352, **ISSN**: 2305-0543

Available online at: http://www.aeuso.org

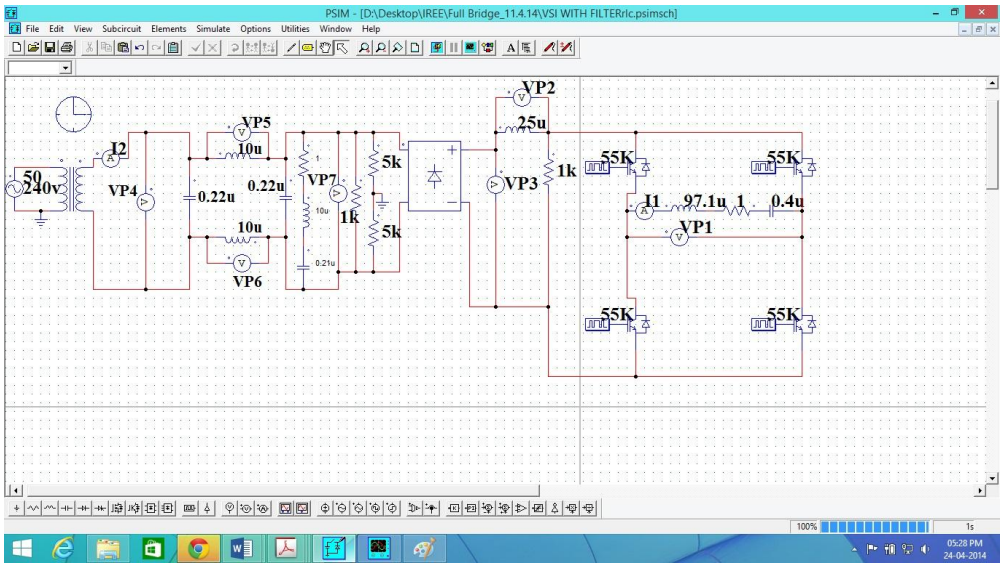

Figure 15: Simulation circuit diagram for High Frequency Full Bridge Resonant Inverter fitted induction heating equipment with LP filter using PSIM software.

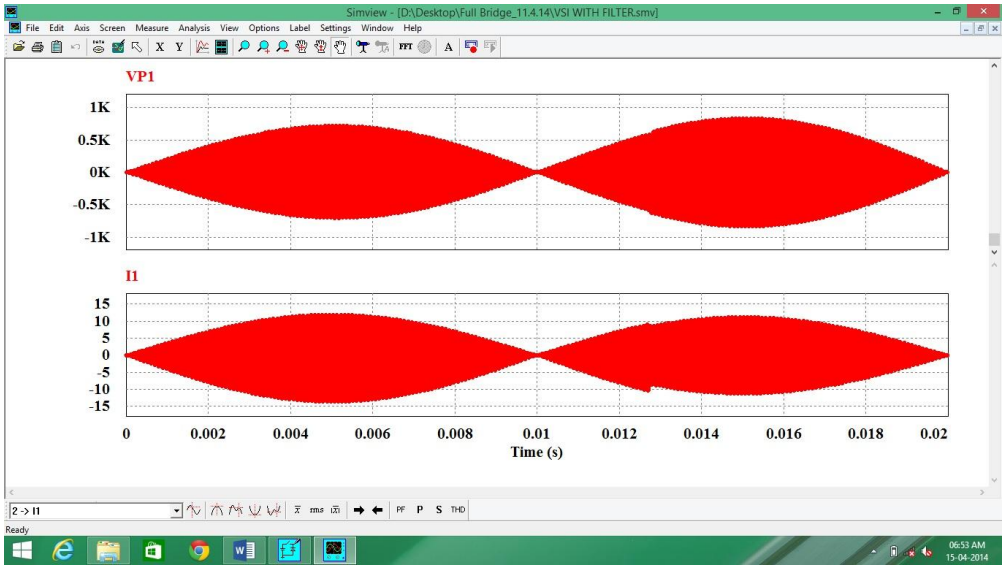

Figure 16: Waveform of load voltage (VP1) and load current (I1) for the High Frequency Full Bridge Resonant Inverter fitted induction heating equipment with LP filter using PSIM software.

International Journal of Mechatronics, Electrical and Computer Technology

Vol. 4(12), Jul, 2014, pp. 1328-1352, **ISSN**: 2305-0543

Available online at: http://www.aeuso.org

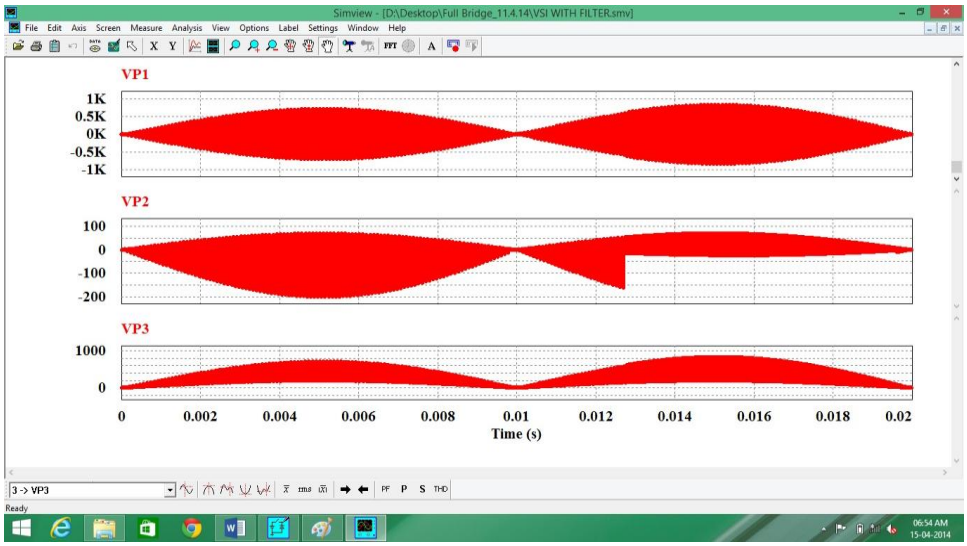

Figure 17: Waveform of load voltage (VP1), voltage across dc link inductor (VP2) and voltage across the rectifier output (VP3) for the High Frequency Full Bridge Resonant Inverter fitted induction heating equipment with LP filter using PSIM software.

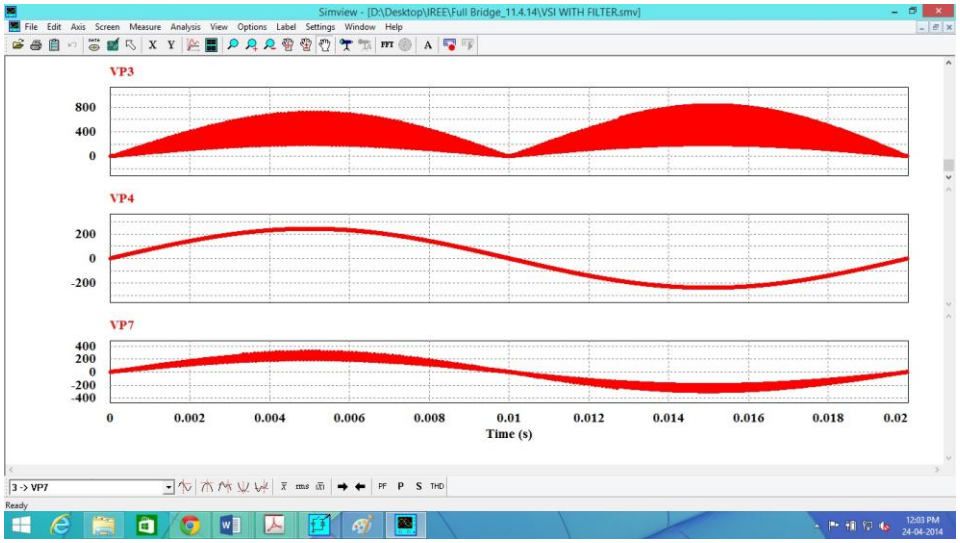

Figure 18: Waveform of voltage across the rectifier output (VP3) and voltage across the rectifier input (VP7) and voltage across the transformer secondary (VP4) for the High Frequency Full Bridge Resonant Inverter fitted induction heating equipment with LP filter using PSIM software.

International Journal of Mechatronics, Electrical and Computer Technology

Vol. 4(12), Jul, 2014, pp. 1328-1352, **ISSN**: 2305-0543

Available online at: http://www.aeuso.org

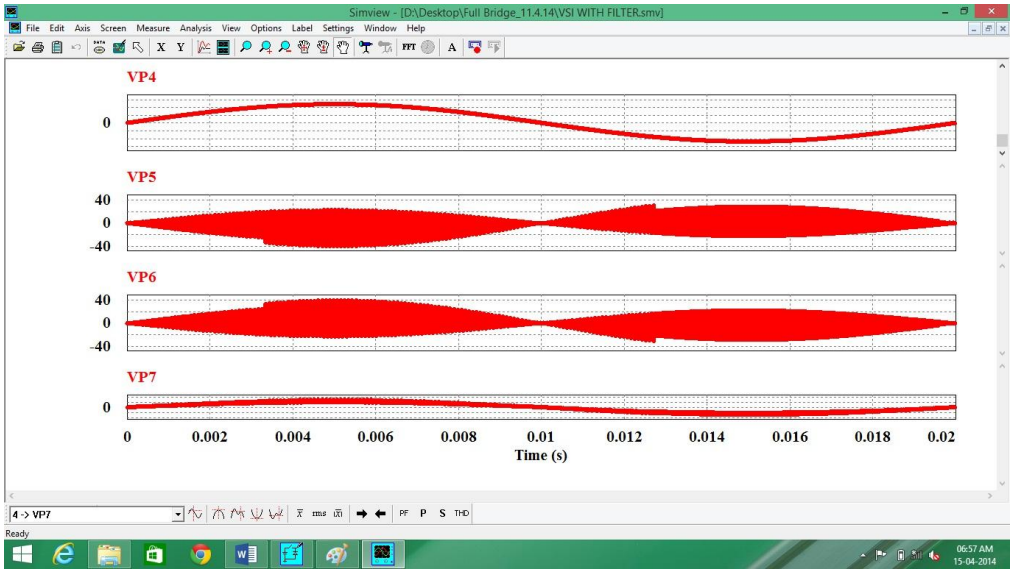

Figure 19:.Voltage across the filter inductors (VP5 and VP6) and Voltage across the transformer secondary (VP4) for the High Frequency Full Bridge Resonant Inverter fitted induction heating equipment with LP filter using PSIM software.

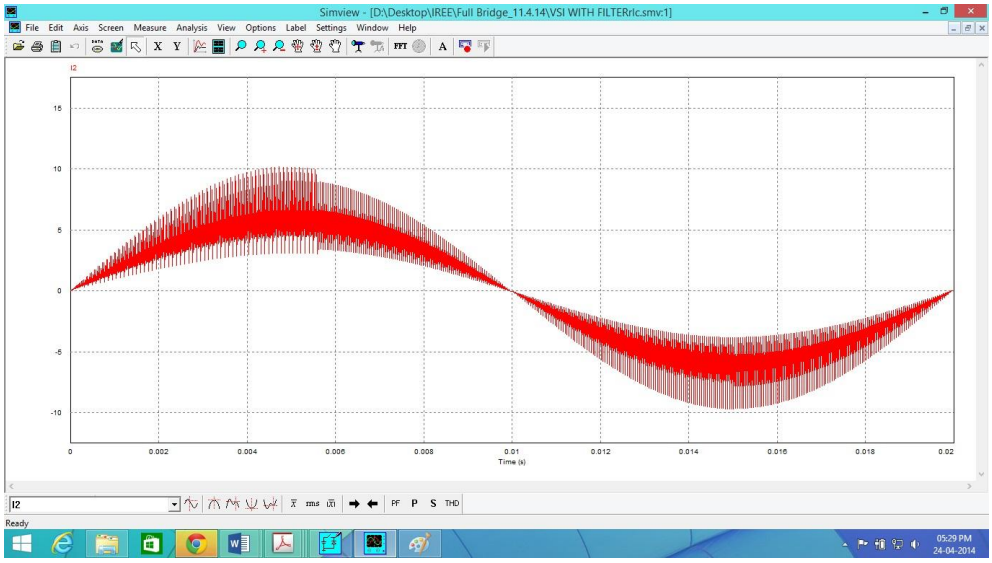

Figure 20: Waveform of input current (I2) for the High Frequency Full Bridge Resonant Inverter fitted induction heating equipment with LP filter using PSIM software.

International Journal of Mechatronics, Electrical and Computer Technology

Vol. 4(12), Jul, 2014, pp. 1328-1352, **ISSN**: 2305-0543

Available online at: http://www.aeuso.org

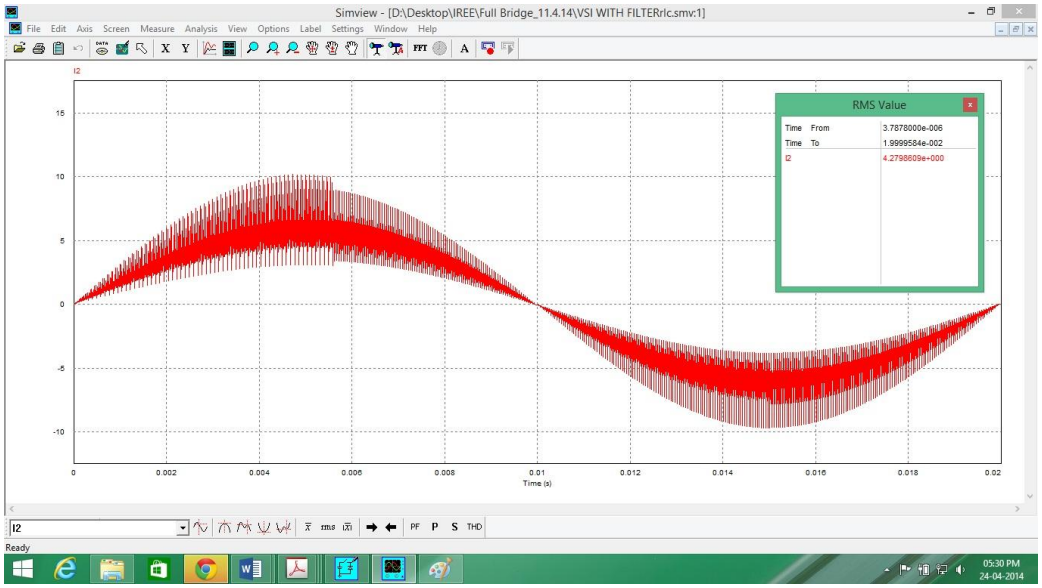

Figure 21: RMS value of input current (I2) for the High Frequency Full Bridge Resonant inverter fitted induction heating equipment with LP filter using PSIM software.

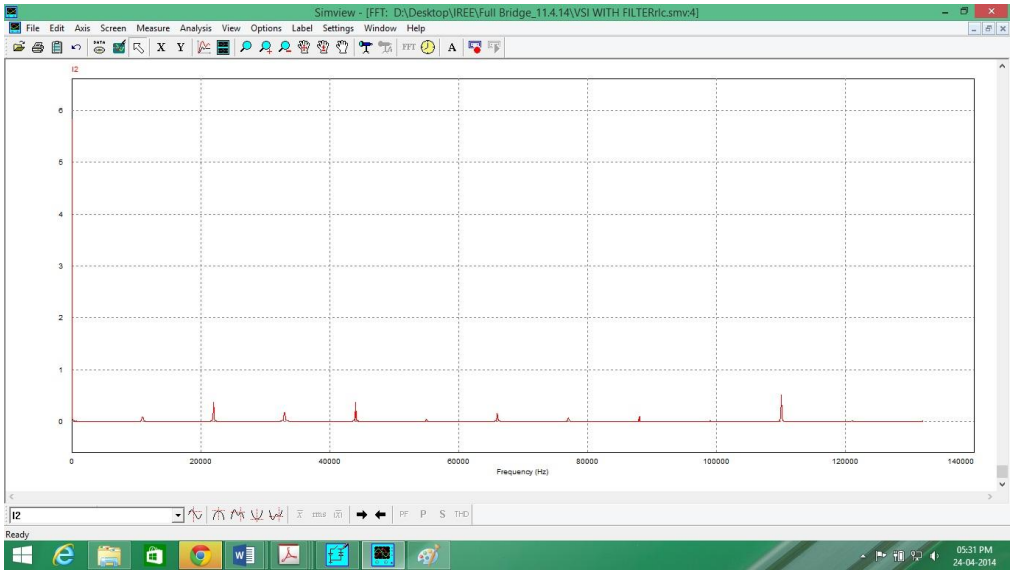

Figure 22: FFT of input current (I2) for the High Frequency Full Bridge Resonant inverter fitted induction heating equipment with LP filter using PSIM software.

International Journal of Mechatronics, Electrical and Computer Technology

Vol. 4(12), Jul, 2014, pp. 1328-1352, **ISSN**: 2305-0543
Available online at: http://www.aeuso.org

8. THD Calculation from Simulated Results of PSIM Software:

8.1. Without Filter:

As in this heading, When the induction heating equipment is without filter, it is seen from Fig. 13 of simulated result of PSIM software that the magnitude of rms value of input current I2 is 4.65 A. The FFT analysis of the input current is done on PSIM software as shown in Fig. 14 and it is seen that the input current consists of 5pair frequency components.

$$T.H.D = \frac{\sqrt{\sum_{n=2,3,.}^{\infty} I_{nr.m.s}{}^{2}}}{I_{1r.m.s}}$$

$$T.H.D = \frac{\sqrt{(1.41\times10^{-1})^2 + (2.10\times10^{-1})^2 + (8.19\times10^{-1})^2 + (5.7\times10^{-1})^2 + ((6.64\times10^{-1})^2\times2) + (4.08\times10^{-1})^2 + (6.25\times10^{-1})^2 + (1.50\times10^{0})^2 + (6.23\times10^{-1})^2}}{4.65}$$

$$= \frac{\sqrt{0.019 + 0.044 + 0.670 + 0.3249 + 0.881 + 0.166 + 0.390 + 2.28 + 0.388}}{4.65}$$

$$= \frac{2.27}{4.65}$$

$$= 48.81\%$$

8.2. With Filter:

When the induction heating equipment is with filter, it is seen from storage oscilloscope that the magnitude of rms value of input current I2 is 4.27 A. The FFT analysis of the input current is done in the oscilloscope and it is shown that the input current consists of nine frequency components.

$$T.H.D = \frac{\sqrt{\sum_{n=2,3,.}^{\infty} I_{nr.m.s}{}^{2}}}{I_{1r.m.s}}$$

International Journal of Mechatronics, Electrical and Computer Technology

Vol. 4(12), Jul, 2014, pp. 1328-1352, **ISSN**: 2305-0543

Available online at: http://www.aeuso.org

$$T.H.D = \frac{\sqrt{(8.625\times10^{-2})^2 + (2.12\times10^{-1})^2 + (1.71\times10^{-1})^2 + (3.39\times10^{-1})^2 + (2.06\times10^{-2})^2 + (6.56\times10^{-2})^2 + (1.62\times10^{-2})^2 + (3.15\times10^{-3})^2 + (3.10\times10^{-1})^2}}{4.27}$$

$$= \frac{\sqrt{0.0007 + 0.044 + 0.029 + 0.114 + 0.000042 + 0.00043 + 0.000026 + 0.0000009 + 0.0961}}{4.27}$$

$$= \frac{0.53}{4.27}$$

$$= 12.48\%$$

Conclusion

In this paper, the scheme is described, which is aimed to design and build up experimental High Frequency Full Bridge Resonant inverter fitted induction heating equipment for industrial applications. The switching operation is controlled using digital controller and the simulation is done on the PSIM platform. In induction heating equipment's, high frequency inverters are required to produce a high frequency alternating magnetic field, which induces eddy currents in the material to be heated. But this high frequency switching results in harmonic distortion. Harmonics are generated due to high frequency switching in the employed inverter of the induction heating equipment. After generation, these harmonics try to flow back to the supply side resulting in deterioration of the power quality. So, with the installation of induction heating equipment, quality of available power is significantly reduced. A well designed filter can attenuate these harmonics and improve the power quality. The current harmonics injected into the power supply should be attenuated by the AC power filter to some specific level according to the harmonic standards. Inverters, which serves as the power supply should be accompanied with power filter to attenuate the injection of current harmonics. The proposed filter, as depicted in Figs. 5 and 6 is employed in the induction heating system to meet imposed utility distortion limits, the injection of current harmonics and improved power quality requirements in the supply end. Consequently it has been shown in PSIM that without filter the THD of the input current (I2) is 48.81%. But when the filter is incorporated at the input, the THD of the input current improves to 12.48%. But it is important to understand that the

Vol. 4(12), Jul, 2014, pp. 1328-1352, **ISSN**: 2305-0543
Available online at: http://www.aeuso.org

RFI suppression capabilities of the filter change significantly when the power supply packaging or layout changes. To support on this claim, it can be mentioned that if IGBT or power rectifier which uses high frequency waveform is directly installed on the chassis of the power supply, with placing only a mica insulator in between them, and the chassis connected to the ac ground conductor, the RFI noise produced will be coupled into the ground conductor resulting in deterioration of the effectiveness of the particular mains filter. A solution is to sandwich a metal shield between the mica insulators and to return the shield to the DC ground. In effect, this technique effectively shorts the capacitor created by the mica insulator, resulting in reduced RF noise currents. So, the designer must take care of the power supply and system layouts to design the filter for eliminating RFI-EMI problems.

References

[1]. Omar El-Nakeeb1, Mostafa I. Marei2, Ahmed A. El-Sattar3" A High Frequency modular Resonant Converter for the Induction Heating" International Journal of Emerging Technology and Advanced Engineering Website: www.ijetae.com ,ISSN 2250-2459, ISO 9001:2008 Certified Journal, vol. 3, Issue 2, February 2013.

[2]. Iran Azim, Habibur, Rahman. Analysis & Simulationof Total Harmonic Distortion in Hysteresis Inverter.International Journal of Advanced Research inComputer Engineering& Technology (IJARCET) Vol.2, Issue.3, March, 2013, pp.574-578.

[3]. M.M. Inallou and J. Nanosci, "International journal of Mechatronics, Electrical and Computer Technology", Vol. 3, 6 (2012), pp. 63-75.

[4]. Alireza Namadmalan and Javad Shokrollahi Moghani "Self-Oscillating Switching Technique for Current Source Parallel Resonant Induction Heating Systems" Journal of Power Electronics, vol. 12, no. 6, November 2012.

[5]. A.J. Onah, "Harmonics: Generation and Suppression in AC System Networks", Nigerian Journal of Technology, Vol. 31, No. 3, November, 2012, pp. 293-299.

[6]. Diego Puyal, Carlos Bernal, Student Member, IEEE, José M. Burdío, Member, IEEE, Jesús Acero, Member, IEEE, and Ignacio Millán,Versatile High-Frequency Inverter Module for Large-Signal Inductive

Vol. 4(12), Jul, 2014, pp. 1328-1352, **ISSN**: 2305-0543
Available online at: http://www.aeuso.org

Loads Characterization Up to 1.5 MHz and 7 kW IEEE TRANSACTIONS ON POWER ELECTRONICS, VOL. 23, NO. 1, JANUARY 2008 PP75-86

[7]. G.P. Sanat, Editor, "Introduction of Mechatronics", Universal Scientific Organization Publishers, Austria, Enns, (2013) , pp.163-275

[8]. Imran Azim, Habibur Rahman.Harmonics Reductionof a Single Phase Half Bridge Inverter, GlobalJournal of Research in Engineering,Vol.13 Issue 4,Version 1, 2013, pp.9-12.

[9]. L. A. Barragan, J. M. Burdio, J. I. Artigas, D. Navarro, J. Acero, and D.Puyal, "Efficiency optimization in ZVS series resonant inverters with asymmetrical voltage-cancellation control," IEEE Trans. Power Electron., vol. 20, no. 5, pp. 1036–1044, Sep. 2005..

[10]. Y. Sozer, D.A. Torrey, S. Reva, "New inverter output filter topology for PWM motor drives", Power Electronics, IEEE Transactions, Vol. 15, Issue 6, Nov 2000, pp. 1007–1017.

[11]. A. Suresh and S. Rama Reddy " Series and Parallel Resonant Inverter Fed Ferromagnetic Load-A Comparative Analysis " International Conference on Emerging Trends in Computer and Image Processing (ICETCIP'2011) Bangkok December, 2011.

[12]. D.E. Steeper and R.P. Stratford, "Reactive Compensation and Harmonic Suppression for Industrial Power Systems Using Thyristor Converters", IEEE Transactions on Industry Applications, Vol. 12, 1976, pp 232-254.

[13]. Diego Puyal, Carlos Bernal, Student Member, IEEE, José M. Burdío, Member, IEEE, Jesús Acero, Member, IEEE, and Ignacio Millán,Versatile High-Frequency Inverter Module for Large-Signal Inductive Loads Characterization Up to 1.5 MHz and 7 kW IEEE TRANSACTIONS ON POWER ELECTRONICS, VOL. 23, NO. 1, JANUARY 2008 PP75-86

[14]. J. Kim, J. Choi, H. Hong, "Output LC filter design of voltage source inverter considering the performance of controller", Power System Technology, Proceedings 2000,Vol. 3, pp.1659–1664.

[15]. Jose M. Burdio, Fernando Monterde, Jose R. Garcia, Luis A. Barragan, and Abelardo Martinez, A two-output series-resonant inverter for induction-heating cooking appliances, IEEE Trans. Power Electron., Vol. 20, No. 4, , July 2005, pp. 815-822.

[16]. Kazuki Saso, Takahiro Ito, Yusuke Ishimaru, Kouki Matsuse and Masayoshi Tsukahara "Adjustable High Frequency Quasi-Resonant Inverter for Induction Heating" Journal of International Council on Electrical Engineering vol. 1, no. 1, pp. 104-109, 2011.

[17]. M.A Inayathullaah, Dr. R. Anita, "Single Phase High Frequency Ac Converter For Induction Heating Application", International Journal of Engineering Science and Technology, vol.. 2 no.12,pp. 7191-7197, 2010.

International Journal of Mechatronics, Electrical and Computer Technology

Vol. 4(12), Jul, 2014, pp. 1328-1352, **ISSN**: 2305-0543

Available online at: http://www.aeuso.org

[18]. Omar El-Nakeeb1, Mostafa I. Marei2, Ahmed A. El-Sattar3" A High Frequency modular Resonant Converter for the Induction Heating" International Journal of Emerging Technology and Advanced Engineering Website: www.ijetae.com ,ISSN 2250-2459, ISO 9001:2008 Certified Journal, vol. 3, Issue 2, February 2013.

[19]. P.A. Dahono, A. Purwadi, Q. Amaruzzaman, "An LC filter design method for single-phase PWM inverters". Power Electronics and Drive Systems, Proceedings 1995, Vol.2, pp.571–576.

[20]. R.S.M.W. Ahmed, M. M. Eissa (Senior Member, IEEE), M. Edress and T. S. Abdel-Hameed *Department of Electrical Machine and Power Engineering Faculty of Engineering-Helwan University at Helwan Cairo, Egypt * Email: eng_tamer_sayed@yahoo.com, Experimental investigation of full Bridge Series Resonant Inverters for Induction-Heating Cooking Appliances 2009,ICIEA PP3327-3332

[21]. S.Arumugam1 S.Ramareddy2 S.RamareddyPPA Novel Analysis Of Full Bridge Series- Parallel Resonant Inverter For High Frequency Application2011 IEEE PES Innovative Smart Grid Technologies – India

[22]. Saichol Chudjuarjeen, Anawach Sangswang, and Chayant Koompai Department of Electrical Engineering, Faculty of Engineering King Mongkut's University of Technology ThonburiBangkok,.Thailand.Email:c_somchai2@hotmail.com, anawach.san@kmutt.ac.thLLC Resonant Inverter for Induction Heating with Asymmetrical Voltage-Cancellation Control 2009 IEEE

[23]. S o z e r Y., To r r e y D . A . , Re v a S, New inverter output filter topology for PWM motor drives. Power Electronics, IEEE Transactions, Vol. 15, Issue 6Nov 2000, pp. 1007–1017.

[24]. Y. Sozer, D.A. Torrey, S. Reva, "New inverter output filter topology for PWM motor drives", Power Electronics, IEEE Transactions, Vol. 15, Issue 6, Nov 2000, pp. 1007–1017.