International Journal of Mechatronics, Electrical and Computer Technology

Vol. 4(13), Oct, 2014, pp. 1691-1705, **ISSN**: 2305-0543
Available online at: http://www.aeuso.org

Evaluation of Non-Functional Requirements of Enterprise Architecture Using Formal Models

Maryam Nazemi Ashani[1*], Ali HarounAbadi[2] and sayed Javad Mirabedini[2]

[1]student, Department of Computer Engineering, Islamic Azad University of Science and Research Branch, Damavand Branch, Iran

[3]Faculty of Computer Engineering, Islamic Azad University, Central Tehran Brach, Iran

*Corresponding Author's E-mail: *maryam_nazemi63@yahoo.com*

Abstract

As the sensitive and important role of architecture is obvious, developing an appropriate architecture had significant impact in efficiency of enterprise and also in success or failure of enterprise. Enterprise Architecture by a process called "enterprise architecture process" will prepare. This process has three phases of IT strategic planning, enterprise architecture planning and implementation of enterprise architecture, and each phase is a prerequisite for the next phase. Reliability has considerable impact on the success of each phase, and ultimately the success of the entire architecture. if executable model of enterprise architecture products is created in the second phase and this model is used to reliability evaluation, this would be changed if reliability had not been filled in phase. In this study has been used unified modeling language and reliability parameter as generalize stereotypes have been added. Then, executable model of enterprise architecture products has been made by using Colored Petri Net. By using the results of simulation of this model we can compute the minimum and maximum of reliability (interval of reliability) and rate of occurrence of failure. The proposed approach than former methods has this privilege that by early computing of reliability in planning phase and consider the feedback on the model and modify the model, it is possible to avoid onerous costs of implementation.

Keywords: Enterprise Architecture, Evaluation of Reliability, Stereotype, Executable Model, Colored Petri Net.

1. Introduction

Enterprise Architecture is comprehensive method for structure description and current behavior description or the future of processes of an enterprise, information systems, and

International Journal of Mechatronics, Electrical and Computer Technology

Vol. 4(13), Oct, 2014, pp. 1691-1705, **ISSN**: 2305-0543
Available online at: http://www.aeuso.org

enterprise subunits. Then enterprise architecture adjusts with enterprise main purposes or enterprise strategy, despite in most cases has close relationship with information technology. Enterprise architecture evaluation always consider as one of architects challenges and architecture project observers. In recent years different methods in order to evaluate architecture have been considered and in various have been related. In [1] C4ISR architecture products which produced with object oriented approach has been transformed to Colored Petri Nets. This method doesn't force the architect to utilize unusual model for developing enterprise architecture products and provides making applicable model from UML diagrams and architecture products. So these are considered as advantage. But in this method most problems are related to correct behavior evaluation and don't evaluate non-functional requirements like efficiency.

In [2] UML diagrams transformation has been considered to Object Stochastic Activity Network. OSAN model protects object-oriented and also there are some elements in this model which caused it a strong tool for architecture evaluation especially evaluation of architecture efficiency. Since support tool of this model couldn't able display graphical representation of model implementation, it isn't simple to consider architecture behavior.

In [3] has been proposed an approach based on Colored Petri Net that its purpose is using mathematic model for certain analysis secure feature and probabilistic evaluation of reliability, availability and maintainability criteria. In [4] the profile with feature development of UML2.0 is defined for supporting reliability estimation based on scenario specification. Then UML model which specified by using this profile changed into LTS that used for automatic reliability estimation. The results of this analyzing are returned to UML modeling area. The aim is presenting more comprehensive profile for modeling of reliability consistent with OMG. In [5] CDG reliability model (component dependency graph) and the SBRA reliability analyzing technique (scenario based reliability analysis) have been defined. By using some scenarios of component interactions, CDG probabilistic modeling has been made and reliability analyzing algorithm for reliability analysis of has been developed as function of architecture elements reliability. In [6] has been introduced estimation technique and reliability modeling that show modeling notation like UML and the models automatically has changed into a formal analyzing model. Above approach is development of PCM such as supporting tool for transformation model into markov chains and implementation new method of reliability evaluation. There are different

Vol. 4(13), Oct, 2014, pp. 1691-1705, ISSN: 2305-0543
Available online at: http://www.aeuso.org

frameworks for enterprise architecture. As C4ISR architecture framework included the methodology of producing in own framework and warranty producing minimum existing products, this appropriate framework has been considered for study.

Refer to multipurpose unified modeling language and its general applicability, it is possible to use its diagrams in each three C4ISR architecture viewpoints and utilize for representation architecture products (diagrams). So in this paper has been UML for architecture documentation and also has been Timed Colored Petri Net in order to develop executable architecture model. Since the exact reliability calculation in complex enterprises is difficult, so in this paper a new method is presented to evaluate the reliability that can be computed minimum and maximum reliability values. So we obtained reliability interval that accurate reliability located in this interval for complex systems that are difficult to evaluate the exact reliability. The rest of this study as follows:

Section 2 present basic concepts like C4ISR architecture framework concepts, UML stereotypes, Colored Petri Nets and transformation algorithm. Section 3 relates to proposed method of evaluation of reliability. Section 4 presents an example of a system. Finally section 5 results the paper.

2. Basic Concepts

2.1. C4ISR Architecture Framework

Issued document of C4ISR architecture framework by defense ministry specified four viewpoints of information architecture and defined the described products of each view. Four views are total view, operating architecture view, system architecture view and technical architecture view. Each viewpoint describes specific feature of architecture by using text, graphical or tabular products [1]. Total viewpoints involve two products, short consideration and summarized product information. AV-1 is such as a summarized operating and includes text information abstract which allows comparing and referring between architectures quickly. These information are architecture and architect, its aim, area and background and also describe major results, recommendation based on architecture. Integrated dictionary is AV-2. Operating architecture viewpoint is description of works and activity, elements operation and information streams which need for doing or supporting military operating and describes the architecture from

Vol. 4(13), Oct, 2014, pp. 1691-1705, **ISSN**: 2305-0543
Available online at: http://www.aeuso.org

factor concept viewpoint. Therefore it doesn't reflect technology or systems, but reflects most operating activities which implement in conceptual operation ties and messages interchange and information which located between ties are reflected and involves seven products.

OV-1 high level operation graphic concept is the most flexible designed products for transmission of action high level description that architecture protects. Generally ties formed as icons and connections. Icons show enterprises, assets, missions or works and information flows or connectivity. OV-1 should be along with text description of operation concept imaged in graphic.

OV-2, OV-3, OV-4 are respectively operation tie connectivity description, operation information interchange matrix and commanding relation diagram. OV-2 is directed graph that its ties are ties or operation elements and its arcs called need lines that necessary connectivity and elements flow of operation information between ties are shown. Each tie with its action has been notated and each one needs a path with notated operation information elements that one of operation element flows to another.

OV-3 put all information of OV-2 in a table. This current of information, ties and action which produce and consume the current and show the some feature like size, frequency, needs of setting time and some features of interoperability. OV-4 has been considered for presenting the main relation between operation elements such as wheel control and cooperating.

OV-5, OV-6, OV-7 reflect details of architecture design. OV-5 is action model. If structured analyze has been used for architecture, AV-5 generally would be the diagram of data flow or IDEF0 model. OV-7 is relational data model which describes data elements and data structure have used in architecture.

2.2. Stereotypes of The Unified Modeling Language

Unified Modeling Language (UML) now is the most important standard language in industrial in order to distinct, imagination and documentation of products (artifacts) of software systems. as in fact UML has been developed for object oriented software designing originally, using this has developed to other sections, such as architecture modeling [7]. Actually a stereotype is an added new elements to Unified Modeling Language modeling elements that has similar structure with one of preexistent elements with this difference that may added some extra constraints or its image and interpretation has been changed.

International Journal of Mechatronics, Electrical and Computer Technology

Vol. 4(13), Oct, 2014, pp. 1691-1705, **ISSN**: 2305-0543
Available online at: http://www.aeuso.org

In this paper, we have benefited from presented profile stereotypes by Cortellessa [8]. This profile is used to evaluate the reliability analysis of component-based applications.

2.3. Colored Petri Nets

Colored Petri Nets has introduced as a developed model of Petri Nets. In addition of places, transitions and tokens in this network present color, guard and expression. The data amount carries by token in these networks. Colored Petri Nets represent more accurate models of complex asynchronous processing systems. In this networks unlike Petri Nets, tokens are distinguishable since each tokens own features as color [9].

Colored Petri Net is an ordered 6 items as CPN = (P, T, C, I-, I+, M0) that:

1. P is a finite set and non-empty of places
2. T is a finite set and non-empty of transition
3. $T \cap P = \emptyset$
4. C is colored function that maps set $T \cup P$ to non-empty set.
5. I- and I+ are fore runner and back runner functions which have defined on P*T as

   I-(p, t) I+ (p, t): C (t)$\Rightarrow$ C (p) $\forall$(p, t)$\in$ C (p)
6. M0 is a function which defined on P and is description of first signing as per p belong to P we have

   M0 (p)$\in$ C (p).

One of concepts that should be considered in the qualitative feature of reliability evaluation is time issue. In Colored Petri Nets, time concepts by an element called whole clock are introduced. The amount which this clock chooses presents time of model. The time could be an accurate number that indicates time is discrete or could be real number indicates the time is continues. In addition it is possible to add amount time to each token which called timestamp.

2.4. Transformation Algorithm

First step for creating executable model is transformation of annotated sequence diagram to Timed Colored Petri Net. In this study, we use proposed algorithm in [10] as follows:

If each component in sequence diagram with stereotype REcomponent would be annotated, this diagram for estimation of reliability of each component changes into Petri Net in accordance to expression 1[11]. Sent messages to a component as change into Petri Net and send to receiver component, their failure probability also refer to their arcs expressions will transfer to an extra

International Journal of Mechatronics, Electrical and Computer Technology

Vol. 4(13), Oct, 2014, pp. 1691-1705, **ISSN**: 2305-0543
Available online at: http://www.aeuso.org

location. Figure 1 shows this type of diagram and its equivalent Petri Net. If each message in the diagram annotate with REconnector stereotype it means the lose probability is specified, refer to expression 2[11], the lose probability between two component change into Petri Net in accordance to figure 2. In this transmission, transition of each sent message, in addition of sending message, saves the lose probability in new location.

$$\theta_{ij} = \text{prob (failure } C_{ij}) = 1 - (1 - \theta_i)^{bpij} \quad (1)$$

$$\Psi_{imj} = (1 - \Psi_i)^{|\text{interact } (I, m, j)|} \quad (2)$$

For accounting the average lose probability in each system we use expression 3[11]:

$$\theta_s = 1 - \sum_{j=1}^{k} p_j \left(\prod_{i=1}^{N} (1 - \Theta_i)^{bp_i} \cdot \prod_{(1,j)} (1 - \Psi_i)^{|\text{interact } (I,m,j)|} \right) \quad (3)$$

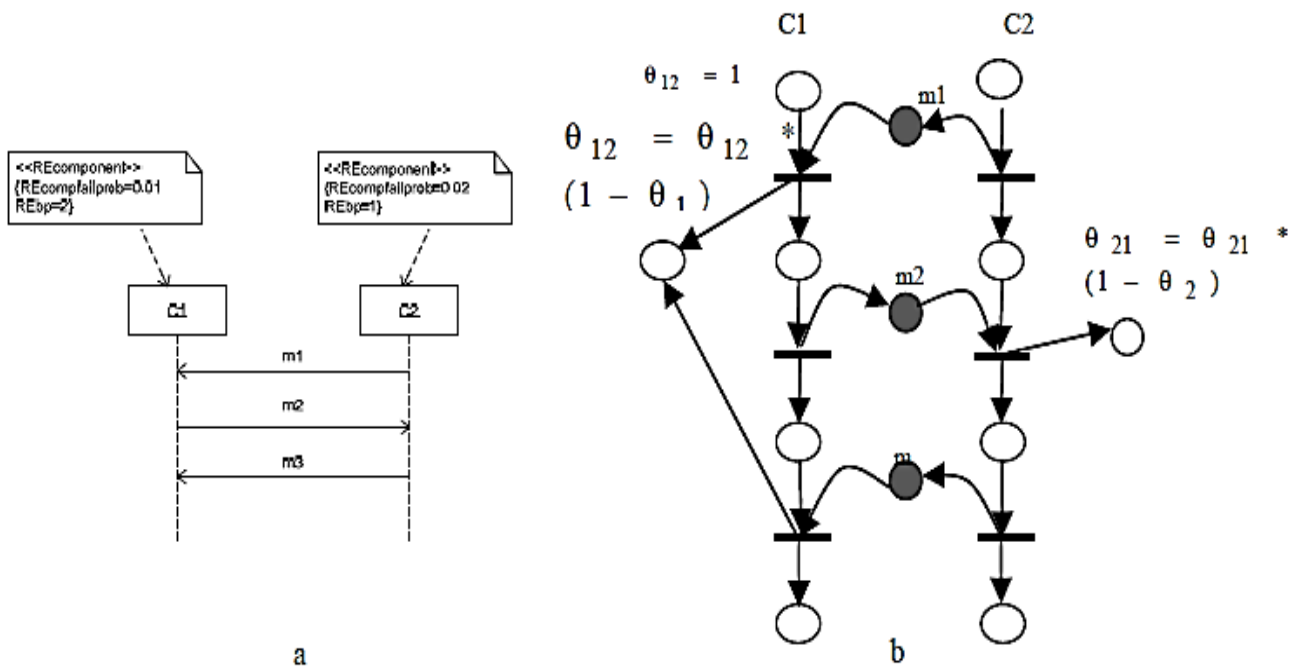

Figure1. Annotated sequence diagram with stereotype REcomponent and equivalent Petri Net [10]

International Journal of Mechatronics, Electrical and Computer Technology

Vol. 4(13), Oct, 2014, pp. 1691-1705, **ISSN**: 2305-0543

Available online at: http://www.aeuso.org

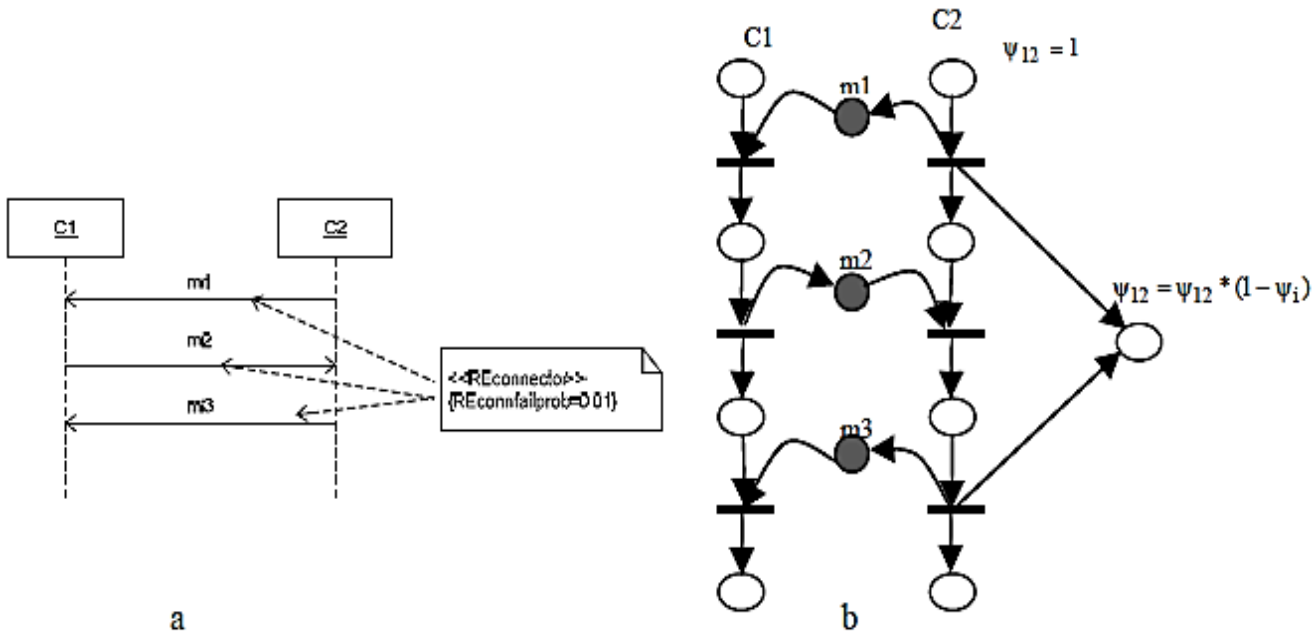

Figure2. Annotated sequence diagram with stereotype REconnector and equivalent Petri Net [10]

3. Proposed Method

3.1. Generalizing Stereotype

We generalize REcomponent stereotype as:

- First step: the tagged value of REcompfailprob will generalize as:

  REcompminfailprob, REcompmaxfailprob
- Second step: we define the tagged value of fail number as:

  REcountfail

3.2. Executable Model Based on Colored Petri Net

- First step: for transmission of sequence diagram to Colored Petri Net of algorithm that presented in former section.
- Second step: for tagged values REcompminfailprob and REcompmaxfailprob we consider two locations of MinFail and MaxFail which first one has minimum failure and there is maximum failure in another one.

International Journal of Mechatronics, Electrical and Computer Technology

Vol. 4(13), Oct, 2014, pp. 1691-1705, **ISSN**: 2305-0543

Available online at: http://www.aeuso.org

- Third step: we define variable of countfi in CPN Tools for tagged value REcountfail of each ci component in index. Figure 3 shows the annotated Sequence diagram with generalized stereotype and equivalent Petri nets.

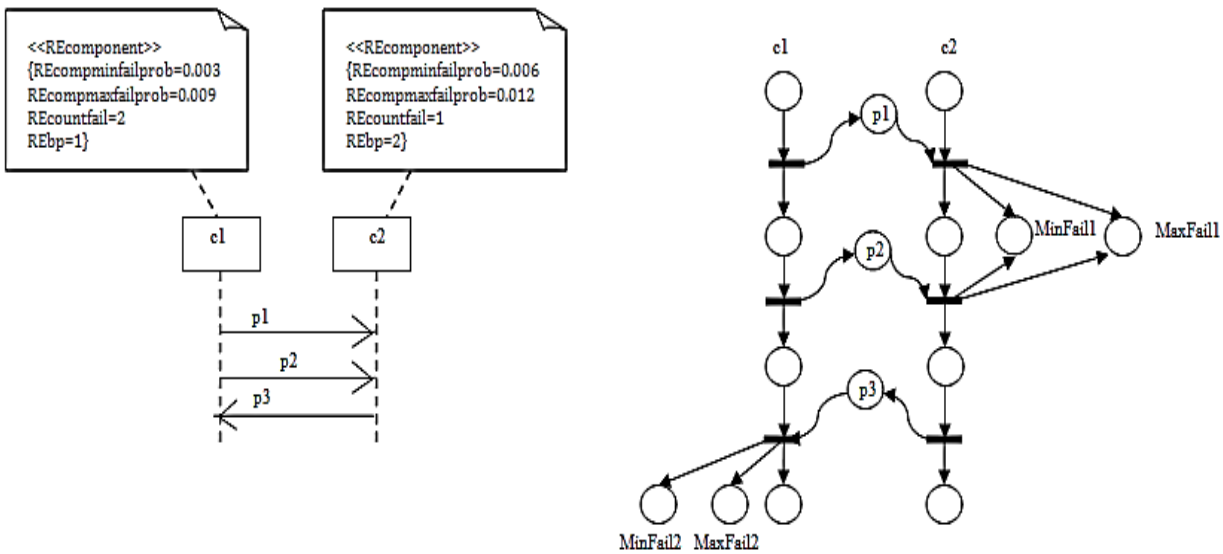

Figure3. An annotated Sequence diagram with generalized stereotype and equivalent Petri nets.

- Forth step: accounting amounts

  4.1 For accounting the failure probability average in system level we account θ_{sMin} and θ_{sMax} that first average is minimum failure prob and another one is maximum failure prob. so it is possible to count max reliability and min reliability of system.

  4.2 For counting the average rate of system failure occurrence we first count whole system failures by using expression (4) then we use expression (5) defined in [12].

$$CF=\sum_{i=1}^{n} countf\,i \quad (4)$$

$$\text{Occurrence} = \frac{CF}{SystemTotalTime} \quad (5)$$

n: the number of annotated components with above tagged values.

We apply these accounts by monitor mechanism in CPN Tools.

International Journal of Mechatronics, Electrical and Computer Technology

Vol. 4(13), Oct, 2014, pp. 1691-1705, **ISSN**: 2305-0543
Available online at: http://www.aeuso.org

- Fifth step: duplication of simulation

In this step we repeat simulation per changing failure prob amount and failure number to number we want. Accounted amount by monitor should be transmitted to excel software and draw its diagrams. This diagrams present changing in reliability amount and failure occurrence rate.

4. Case Study

The fuel smart label system [1] is not complex and developing architecture products with C4ISR framework is possible and also it has many usages in this situation so it is suitable. One of targets of this example is possibility of reliability evaluation in enterprise architecture level that related information of these needs will be added to diagrams by architect. In use case diagram of this system, has been considered a prob between each relation of user and use case that this prob shows use case execution by user. Figure 4 shows use case diagram fuel intelligent tag system with these stereotypes. As it is specified in this figure, for actor, the prob of each need use case of reliability evaluation has been determined. Sequence diagram describes relation pattern of samples. This diagram presents periods number of each component in busy situation and failure prob of each component in j scenario for reliability evaluation. In figure 6 annotated relation information of reliability to sequence diagram of this system. In this figure, annotated REcomponent along with REbp, REcountfail, REcompminfailprob, and REcompmaxfailprob to each sequence diagram components that linked to lifeline exception lifeline which show system user. Also annotated interaction between component with REconnector stereotype and REconnfailprob tag. Also deployment diagram is annotated with reliability parameters because the aspect of reliability of nodes and links between them to express. In fact, based on this annotations the probability of failure can be assigned to each interaction of sequence diagram. Figure 5 shows the annotated deployment diagram of Fuel Smart Label System with Reliability stereotypes.

International Journal of Mechatronics, Electrical and Computer Technology

Vol. 4(13), Oct, 2014, pp. 1691-1705, **ISSN**: 2305-0543

Available online at: http://www.aeuso.org

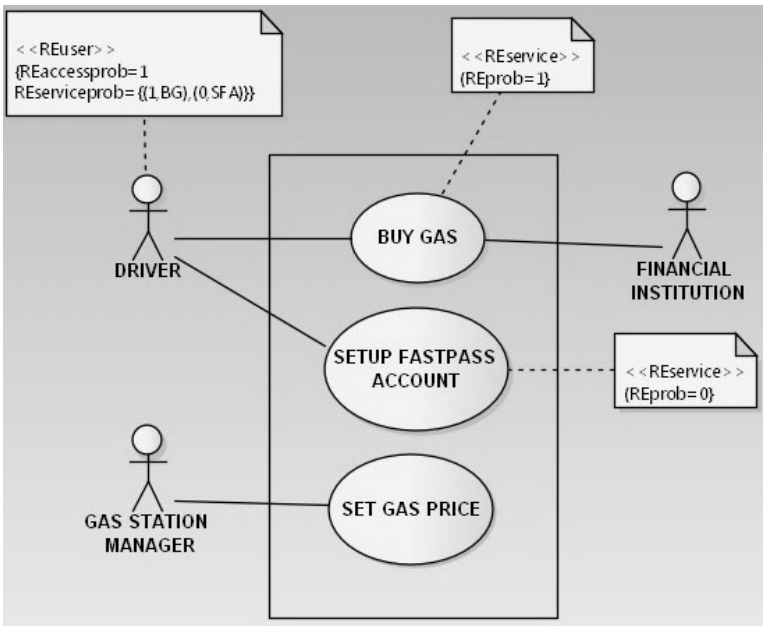

Figur4.Annotated use case diagram of Fuel Smart Label System along with reliability parameters

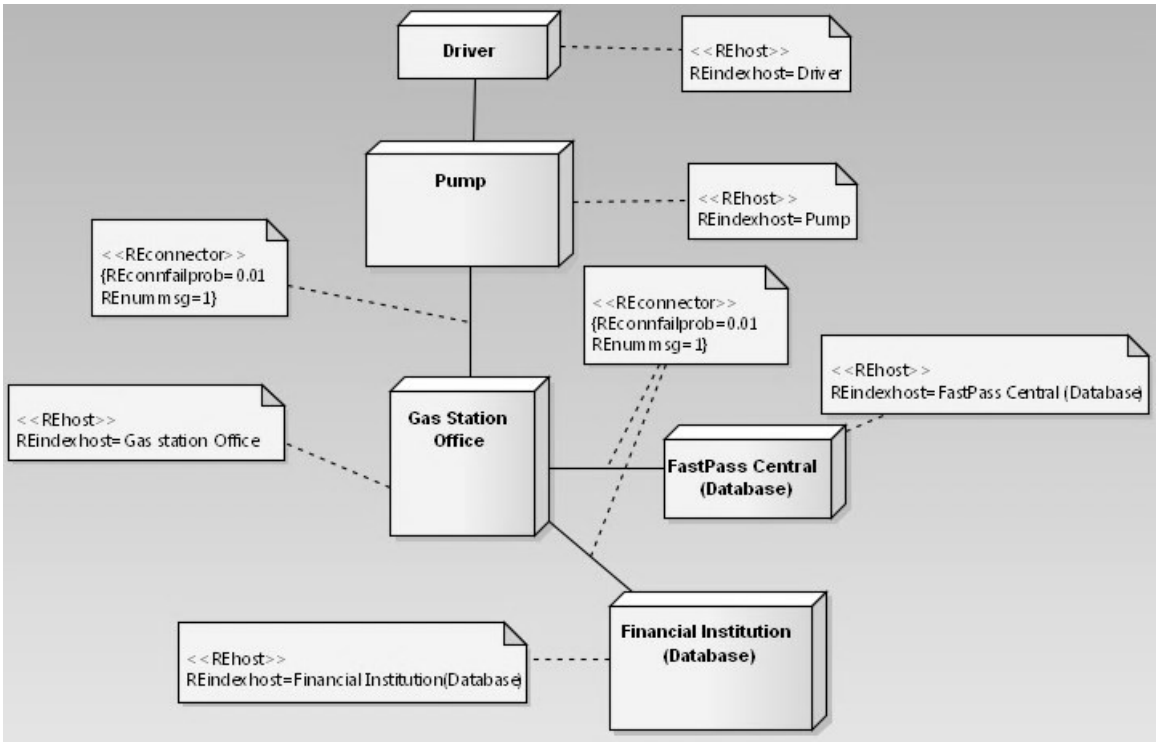

Figure5. Annotated deployment diagram of Fuel Smart Label System along with reliability parameters

International Journal of Mechatronics, Electrical and Computer Technology

Vol. 4(13), Oct, 2014, pp. 1691-1705, **ISSN**: 2305-0543

Available online at: http://www.aeuso.org

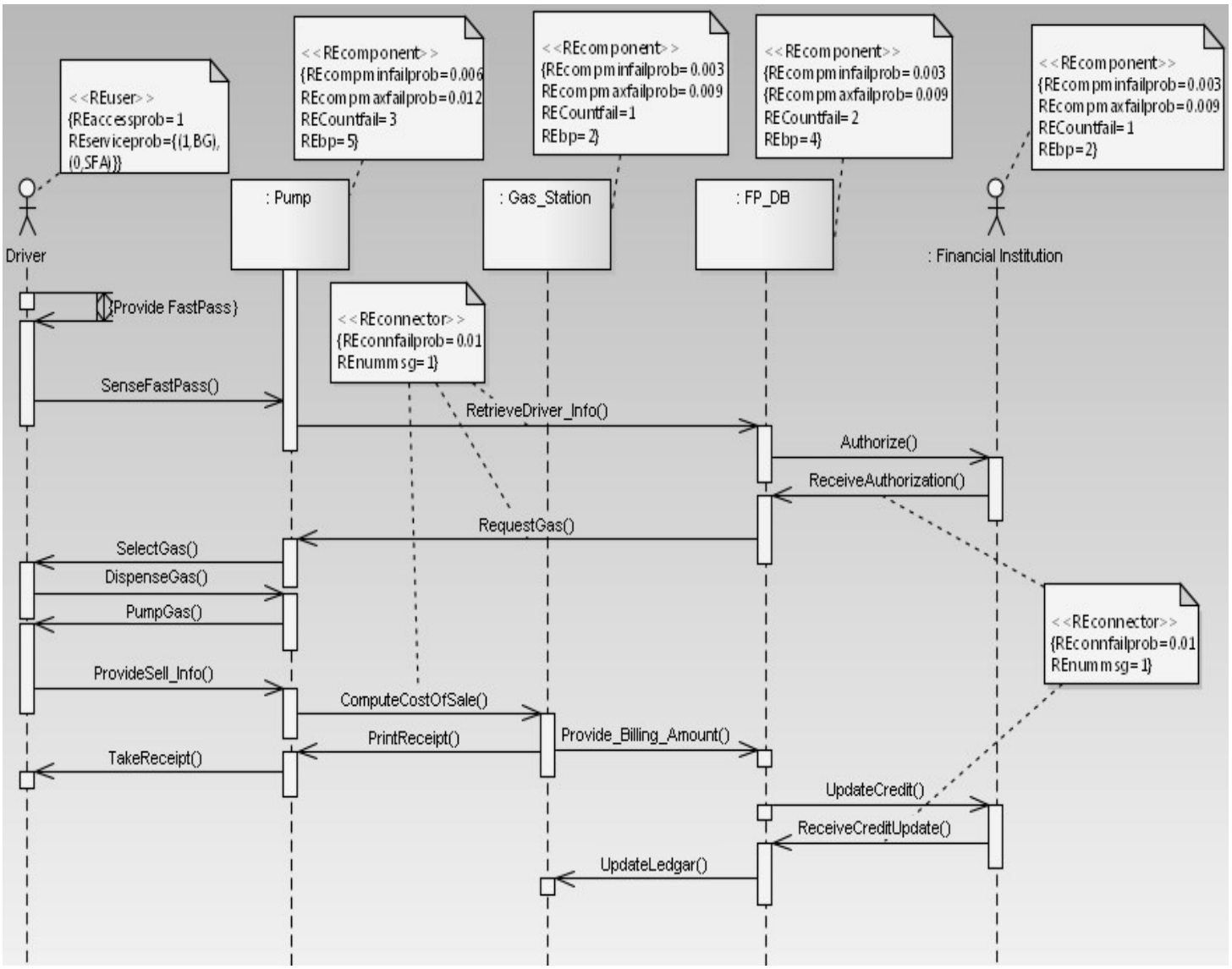

Figur6.Annotated sequence diagram of Fuel Smart Label System along with reliability parameters

Because in this system, only one use case diagram in reliability evaluation was considered important and this diagram has one sequence diagram, According to the procedure described in the previous section, the sequence diagram is transformed to timed colored Petri net model. Figure 7 shows developed model of them in CPN Tools.

International Journal of Mechatronics, Electrical and Computer Technology

Vol. 4(13), Oct, 2014, pp. 1691-1705, **ISSN**: 2305-0543

Available online at: http://www.aeuso.org

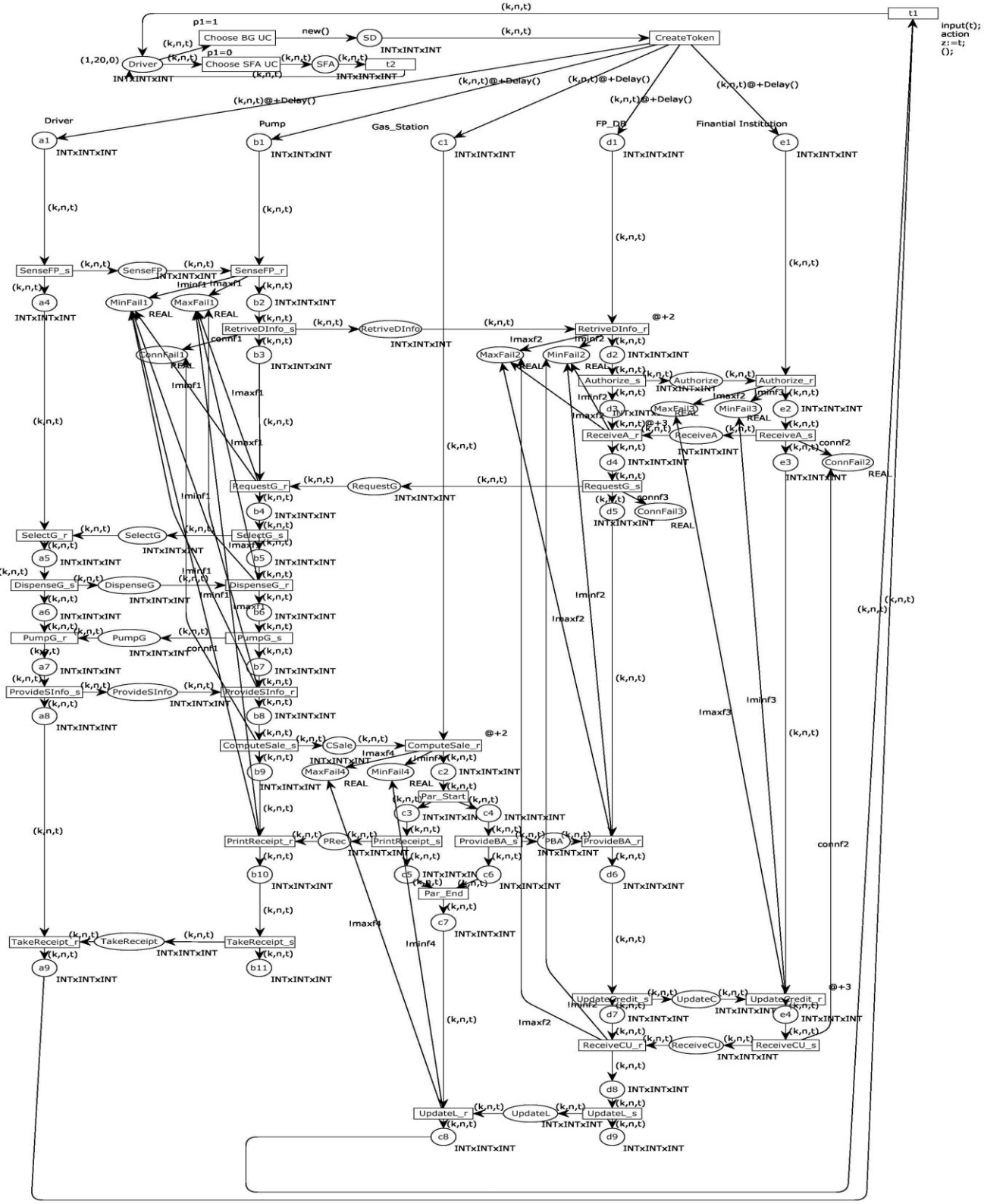

Figure7. Developed model of Colored Petri Net

International Journal of Mechatronics, Electrical and Computer Technology

Vol. 4(13), Oct, 2014, pp. 1691-1705, **ISSN**: 2305-0543
Available online at: http://www.aeuso.org

After describing way of making practicable model, it is time to count minimum and maximum amount of reliability and failure occurrence rate in the system. Therefore we use facility called monitor in CPN Tools is simulation and also supervisor in Colored Petri Net running. So for to define the number of repeated simulations, determine of minimum and maximum reliability and failure occurrence rate for each on separately, a monitor will be determined that count by using former relations and save the results in file. For counting reliability change and failure occurrence rate we repeat simulation four times that in each repeat minimum failure prob and maximum failure prob and failure count vary. Then determined amounts will be shown by diagrams in excel software (figure 8, 9)

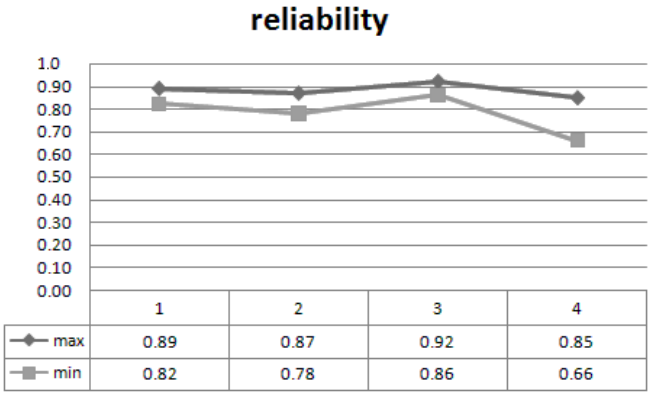

Figure8. Minimum and maximum reliability in 4 times simulations

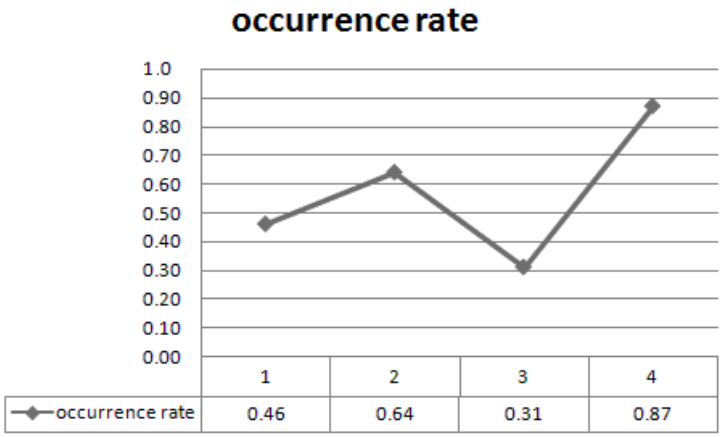

Figure9. Failure occurrence rate in 4 times simulations

International Journal of Mechatronics, Electrical and Computer Technology

Vol. 4(13), Oct, 2014, pp. 1691-1705, **ISSN**: 2305-0543
Available online at: http://www.aeuso.org

Conclusion

What has been related in this study was new method for enterprise architecture reliability evaluation. Therefore we tried by using Colored Petri Nets, present an executable model of architecture products here by it could be possible to simulate designed architecture and check the quality before architecture execution and accomplish necessary actions to reform designed architecture products. For creation an executable model for reliability evaluation, we utilities stereotypes annotation and tags to sequence diagram. Then simulate architecture by running model in CPN Tools software and by using of monitors in CPN Tools software which are strong, determined minimum and maximum reliability and system failure occurrence rate.

References

[1] Wagenhals, L.W., Haidar, S., Levis, A.H., "Synthesizing Executable Models of Object Oriented Architectures", Journal of Systems Engineering, Vol.6, No.4 (2003), pp.266-300.

[2] Abdollahi Azgomi, M., Kamandi, A., Movaghar, A., "Modelling and Evaluation of Software Systems with Object Stochastic Activity Network", International Conference on Software Engineering Advances (2004), pp.58-64.

[3] Pinna, B., Babykina, G., Brinzei, N., Petin, J.F., "Deterministic and Stochastic Dependability Analysis of Industrial Systems using Coloured Petri Nets Approach", Annual Conference of the European Safety and Reliability Association, ESREL, Amsterdam: Netherlands (2013).

[4] Rodrigues, G.N., Rosenblum, D.S., Uchitel, S., "Reliability Prediction in Model-Driven Development", 8th International Conference, Models 2005, Montego Bay, Jamaica, October 2-7, Vol 3713(2005), pp.339-354.

[5] Yacoub, S., Cukic, B., Ammer, H.H., "A Scenario-Based Reliability Analysis Approach for Component-Based Software", IEEE Transactions on Reliability, Vol 53, NO 4(2004), Doi: 0018- 9529/04$20.00.

[6] Brosch, F., Koziolek, H., Buhnova, B., Reussner, R., "Architecture-based Reliability Prediction with the Palladio Component Model", IEEE Transactions on Software Engineering, Vol x, NO x(2011).

[7] Unified Modeling Language (UML), version 1.4. OMG Documentation. At http://www.omg.org/technology/ documents/ formal/uml.htm.

[8] Cortellessa, V., Pompei, A., "Toward a UML Profile for QoS: A Contribution in the Reliability Domain", Proc.4th International Workshop on Software and Performance, New York, USA (2004), pp.197- 206, ISBN 1-58113-673-0.

[9] Kart, J., Lars, M.K., "Coloured Petri Nets", Springer-Verlag Berlin Heidelberg (2009), Doi:10.1007/b95112 ISBN: 978- 3- 642-00284-7.

Vol. 4(13), Oct, 2014, pp. 1691-1705, **ISSN**: 2305-0543
Available online at: http://www.aeuso.org

[10] Emadi, S., "Mapping Annotated Software Architecture Description to a Petri Net Notations for Reliability Evaluation", 3rd International Conference on Software Technology and Engineering, (2011), Doi: 10.1115/1.859797.

[11] Cortellessa, V., singh, H., Cukic, B., "Early Reliability Assessment of UML Based Software Models", Proc.3rd International Workshop on Software Performance, Rome, Italy, WOSP '02, Rome, Italy(2002), ACM. ISBN 1-1-58113-5637.

[12] Wu, L., Teravainen, T., Kaiser, G., Anderson, R., Boulanger, A., "Estimation of System Reliability Using a Semiparametric Model", Energytech, IEEE, May. 25-26(2011), pp.1-6, Doi:10.1109/ EnergyTech. 2011.5948537.