Vol. 6(21), Jul. 2016, PP. 3008-3020

Contents list available at IJMEC

International Journal of Mechatronics, Electrical and Computer Technology (IJMEC)

Journal Homepage: www.aeuso.org

PISSN: 2411-6173 - EISSN: 2305-0543

Decoupled Method Parallel Distributed Compensation and Fuzzy for Control of Electro Hydraulic Servo System by Using Feedback error Learning

Amir Reza Zare Bidaki[1] and Mohsen Jahanshahi[2]

Young Researchers and Elite Club, Buinzahra Branch, Islamic Azad University, Buinzahra, Iran

Young Researchers and Elite Club, Central Tehran Branch, Islamic Azad University, Tehran, Iran

***Corresponding Author's E-mail:** zareamirreza@yahoo.com*

Abstract

Electro hydraulic control systems (EHSS) are important in their ability to handle large torque loads and quick response. Electro hydraulic servo systems (EHSS) in used wide range industrial applications. For instance, typical applications include active suspension systems, control of industrial robots, satellites, flight simulators, turbine control. Velocity, position and torque control are the most important controlling methods for the systems. The electronic components provide the desired flexibility, while the hydraulic part of an EHSS is responsible for successful power management. The main components of the power assembly of an EHSS are its hydraulic power supply, electro hydraulic servo valve, and hydraulic actuator. The control systems suggested before including uncertainty parameters such as: internal friction, external noises, and non-linearity in the model behavior. Decoupled method parallel distributed compensator (PDC) method based on Takagi-Sugeno and fuzzy controller are used in this paper by feedback error learning's idea. The controller is designed for a high level performance (velocity control) which could reach the main control goals. In addition velocity control and identification of the model is carried out by applying regulation scheme. Results indicate that the controller presents better performance and response to the other controllers.

Keywords: *Parallel Distributed Compensator approach, Fuzzy Controller, Feedback Error Learning, Electro hydraulic control system.*

1. Introduction

Electro hydraulic servo systems (EHSS) are encountered in a wide range of modem industrial applications because of their ability to handle large inertia and torque loads and, at the same time, achieve fast responses and a high degree of both accuracy and performance [1, 2]. The electro-hydraulic servo systems have different industrial applications including active suspension systems, control of industrial robots, and processing of plastics. They are also ubiquitous in commercial aircrafts, satellites, launch vehicles, flight simulators, turbine control, and numerous military applications [3]. Depending on the desired control objective, an EHSS can be classified as either a position, velocity or force torque EHSS. Hydraulic and pneumatic systems have the following advantages over other mechanical and electrical systems: 1) simple design, 2) the ability to increase the force, 3) simplicity and precise control, 4) flexibility, 5) high efficiency, and 6) reliability. Other advantages include the existence of fewer moving parts, and the ability to achieve, at any point, linear and rotational movements with high power and proper control. Because the transmission of power is done by high-pressure fluid flow in the transmission lines (tubes and hoses). In such systems, the controlling task can be performed with little force (such as opening and closing valves). The hydraulic and pneumatic systems can be changed to flexible systems by using flexible hoses in which there are not any spatial

Article History:
Received Date: May. 05, 2015
Accepted Date: Jun. 14, 2016
Available Online: Jul. 10, 2016

constraints in comparison with other systems as they need it for installation. Due to low friction and low costs, hydraulic and pneumatic systems have a high efficiency. Also, the hydraulic and pneumatic systems can be changed to a system which is resistant to sudden loads, excessive heat, and pressure by using safety valves and pressure and temperature switches. Having understood the benefits of pneumatic and hydraulic systems, what follows is a simple explanation of how these systems work. The desired control objective species of EHSS are: velocity or force/torque and position control. The details of the control techniques for EHSS are in [6, 7, 8, 9 and 12].

The control techniques used to control the velocity of EHSS are Parallel Distributed Compensation (PDC) and fuzzy [13]. Decoupled of these controllers is used by feedback error learning algorithm. The fuzzy model proposed by Takagi and Sugeno is described by fuzzy IF-THEN rules which represent local linear input-output relations of a nonlinear system. The main feature of a Takagi-Sugeno fuzzy model is to express the local dynamics of each fuzzy implication (rule).by a linear system model. The overall fuzzy model of the system is achieved by fuzzy "blending" of the linear system models.

This paper is organized in the following way: in section 2, EHSS and its nonlinear mathematical model are described. In section 3, PDC approach and fuzzy controller and feedback error learning model are introduced for EHSS. The simulation results are described in section 4 and section 5 is the concluding part.

2. System Description

A schematic view of the relevant electro-hydraulic servo velocity system is displayed in Figure 1 The basic parts of this system are: 1) hydraulic power supply, 2) accumulator, 3) charge valve , 4) pressure gauge device, 5) filter, 6) two-stage electro-hydraulic servo valve, 7) hydraulic motor, 8) measurement device, 9) personal computer, and 10) voltage-to-current converter.

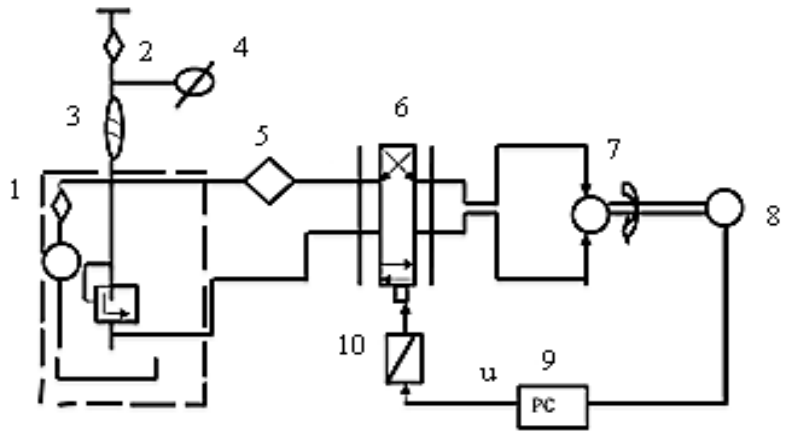

Figure 1: Schematic view of EHSS

Equations of the system using Newton's second law for the rotational motion of the motor shaft are presented as follows:

$$\begin{aligned}
\dot{x}_1 &= \frac{1}{j_t}\{-B_m x_1 + q_m x_2 - q_m c_f p_s\} \\
\dot{x}_2 &= \frac{2\beta_e}{V_o}\{-q_m x_1 - c_{im} x_2 - c_d w x_3 \sqrt{\frac{1}{\rho}(p_s - x_2)}\} \\
\dot{x}_3 &= \frac{1}{T_r}\{-x_3 + \frac{K_r}{K_q} u\} \\
y &= x_1
\end{aligned} \tag{1}$$

Where (x_1, x_2, x_3) are state variables and defined as:

x_1: Hydro motor angular velocity, x_2: Load pressure differential, x_3: Valve displacement. The nominal values of the parameters of the system are presented in Table 1:

Table 1: The parameters of EHSS and their nominal values

Para.	**Description**	**Value**
j_t	Total inertia of the motor and load referred to the motor shaft	$0.03\,\mathrm{kgm}^2$
q_m	Volumetric displacement of the motor	$7.96\times10^{-7}\,\frac{\mathrm{m}^3}{\mathrm{rad}}$
B_m	Viscous damping coefficient	$1.1\times10^{-3}\,\mathrm{Nms}$
c_f	Dimensionless internal friction coefficient	0.104
V_o	Average contained volume of each motor chamber	$1.2\times10^{-4}\,\mathrm{m}^3$
β_e	Effective bulk modulus	$1.391\times10^{9}\,\mathrm{Pa}$
c_d	Discharge coefficient	0.61
c_{im}	Internal or cross-port leakage coefficient of the motor	$1.69\times10^{-11}\,\frac{\mathrm{m}^3}{\mathrm{P_a}\times\mathrm{s}}$
P_s	Supply pressure	$10^{7}\,\mathrm{Pa}$
ρ	Oil density	$850\,\frac{\mathrm{K_g}}{\mathrm{m}^3}$
T_r	Valve time constant	$0.01\mathrm{s}$
K_r	Valve gain	$1.4\times10^{-4}\,\frac{\mathrm{m}^3}{\mathrm{s}\times\mathrm{v}}$
K_q	Valve flow gain	$1.66\,\frac{\mathrm{m}^2}{\mathrm{s}}$
w	Surface gradient	$8\pi\times10^{-3}\,\mathrm{m}$

The control objective is to stabilize any chosen operating point of the system. It is readily shown that equilibrium points of the system (1) are given by:

$$
\begin{aligned}
x_{1N} &= 200\frac{\mathrm{rad}}{\mathrm{s}}\ \text{(Arbitrary constant value of our choice)}\\
x_{2N} &= \frac{1}{q_m}\{B_m x_{1N} + q_m p_s c_f\} \qquad (2)\\
x_{3N} &= \frac{q_m x_{1N} + c_{im} x_{2N}}{c_d w\sqrt{\frac{1}{\rho}(p_s - x_{2N})}},
\end{aligned}
$$

While the value of the control signal necessary to keep x_3 at the equilibrium is:

$$u_N = \frac{K_q}{K_r} x_{3N}$$

It is assumed that the motor shaft does not change its direction of rotation, $x_1>0$. This is a practical assumption and in order for it to be satisfied, the servo valve displacement x_3 does not have to move in both directions to the neutral position $x_3=0$. This fact allows us to restrict the entire problem to the region where $x_3>0$.

3. Proposed Structure Controller

3-1. Feedback error learning structure

The technique of feedback error learning (FEL) was proposed by Kawato, and its general structure is shown in Figure 2[10,11].

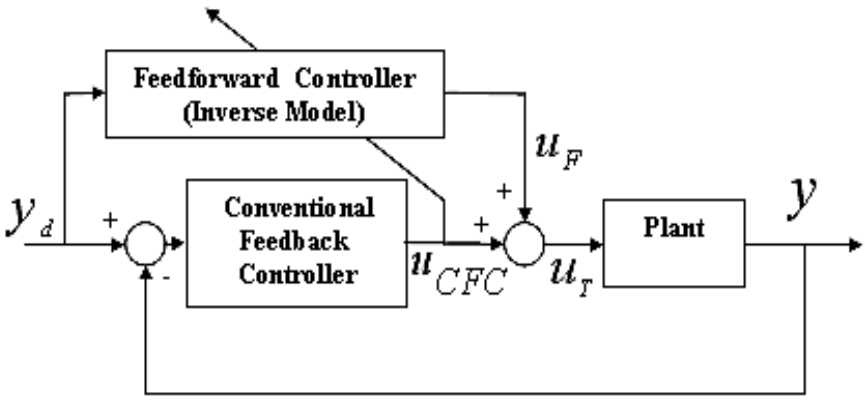

Figure 2: The Feedback Error Learning (FEL) structure

The feedback error learning algorithms consist of two sections: In the first section, input signals are fed in a Feed forward Controller manner through the network to produce actual outputs. In the second section, the output vector of a Conventional Feedback Controller (CFC), U_{CFC} is considered as the error to propagate backward through the Feed forward Controller. The Feed forward Controller does not mimic the Conventional Feedback Controller, but acquires a fully nonlinear inverse model by trying to eliminate the feedback error.

In Figure 2, U_T is the actual input vector to the plant, U_F is the output vector from the Feed forward Controller, and U_{CFC} is the feedback control input vector. In general, the Feedback Controller was realized by a predetermined constant gain Feedback Controller (PID or PD) for FEL scheme in many applications [10]. In this article other FEL method (Regulation) is used to control the EHSS. Also parallel distributed compensation instead Conventional Feedback Controller. Stability of PDC controller by method linear matrix inequality is used.

3-2. Parallel Distributed Compensation (conventional feedback controller)

The history of the so-called parallel distributed compensation (PDC) began with a model-based design procedure proposed by Kang and Sugeno, [15]. However, the stability of the control systems was not addressed in the design procedure. The design procedure was improved and the stability of the control systems was analyzed in [16]. The design procedure is named ‘‘parallel distributed compensation’’ in [11]. The PDC [16] offers a procedure to design a fuzzy controller from a given T-S fuzzy model. To realize the PDC, a controlled object (nonlinear system) is first represented by a T-S fuzzy model. Figure 3 illustrates the model-based fuzzy control design approach discussed to design a

fuzzy controller, nonlinear system is needed a Takagi-Sugeno fuzzy model. Therefore the construction of a fuzzy model represents an important and basic procedure in this approach. In this section has been discussed the issue of how to construct such a fuzzy model. In general there are two approaches for constructing fuzzy models:

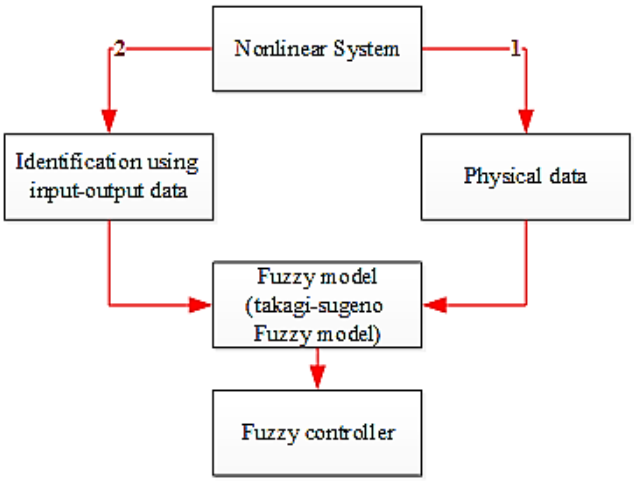

Figure 3: Model-based fuzzy control design

1. Derivation from given nonlinear system equations
2. Identification (fuzzy modeling) using input-output data.

There has been an extensive literature on fuzzy modeling using input-output data following Takagi's, Sugeno's, and Kang's excellent work. The procedure mainly consists of two parts: structure identification and parameter identification. The identification approach to fuzzy modeling is suitable for plants that are unable or too difficult to be represented by analytical and/or physical models. On the other hand, nonlinear dynamic models for mechanical systems can be readily obtained; which derives a fuzzy model from given nonlinear dynamical models, is more appropriate. In this paper is used the first approach because the nonlinear system equations is accessible [5].

Continues fuzzy system:

Model Rule i:

IF $Z_1(t)$ is M_{i1} and...and $Z_p(t)$ is M_{ip}

THEN

$$\begin{cases} \dot{X}(t) = A_i x(t) + B_i u(t) \\ y(t) = C_i x(t) \qquad i = 1,2,....,r \end{cases} \tag{3}$$

Here, M_{ij} is the fuzzy set and r is the number of model rules; $x(t) \in R^n$ is the state vector, $u(t) \in R^m$ is the input vector, $y(t) \in R^q$ is the output vector, $A_i \in R^{n\times n}$, $B_i \in R^{n\times m}$, and $C_i \in R^{q\times n}$; $Z_1(t),.....Z_p(t)$. are known premise variables that may be functions of the state variables, external disturbances, and/or time. We will use *z*(*t*). to denote the vector containing all the individual elements $Z_1(t),.....Z_p(t)$ Each linear consequent equation represented by $A_i x(t) + B_i u(t)$ is called a subsystem. Given a pair of $(x(t), u(t))$, the final outputs of the fuzzy systems are inferred as follows:

$$\dot{x}(t)=\frac{\sum_{i=1}^{r} w_i(z(t))\{A_i x(t)+B_i u(t)\}}{\sum_{i=1}^{r} w_i(z(t))}=\sum_{i=1}^{r} h_i(z(t))\{A_i x(t)+B_i u(t)\} \tag{4}$$

$$y(t)=\frac{\sum_{i=1}^{r} w_i(z(t))\{C_i x(t)\}}{\sum_{i=1}^{r} w_i(z(t))}=\sum_{i=1}^{r} h_i(z(t))\{C_i x(t)\} \tag{5}$$

Where

$$z(t)=[z_1(t)z_2(t)...z_p(t)]$$
$$w_i(z(t))=\prod_{j=1}^{p} M_{ij}(z_j(t)), h_i(z(t))=\frac{w_i(z(t))}{\sum_{i=1}^{r} w_i(z(t))} \tag{6}$$

for all t. The term $M_{ij}(z_j(t))$ is the grade of membership of $z_j(t)$ in M_{ij} .
Since

$$\begin{cases} \sum_{i=1}^{r} w_i(z(t))>0 \\ w_i(z(t))\geq 0 \qquad i=1,2,....,r \end{cases} \tag{7}$$

3-3.Fuzzy structure (feed forward controller)

The fuzzy controller (FC) system which is used to produce U_F is defined by using following rules:

$$Rule^{i_1 i_2}: IF\ e_x\ is\ A_1^{i_1}\ and\ e_{\dot{x}}\ is\ A_2^{i_2}\ THEN\ U_F\ is\ \theta^{i_1 i_2}$$

Where

$$A_1^{i_1},\ i_1=1,2,...,n_1,\ A_2^{i_2},\ i_2=1,2,...,n_2$$

are the labels of the fuzzy sets characterized by the fuzzy membership functions $\mu_{A_1}^{i_1}(e_x)$, $\mu_{A_2}^{i_2}(e_{\dot{x}})$ respectively and $\theta^{i_1 i_2}$ are the adjustable fuzzy singletons. The defuzzifier used in the fuzzy controller to defuzzification of the outputs is Center Average defuzzifier. By using multiplying inference, U_F can be written in the following way.

$$U_F = \frac{\sum_{i_1}^{n_1}\sum_{i_2}^{n_2}\theta^{i_1 i_2}[\mu_{A_1}{}^{i_1}(e_x)\mu_{A_2}{}^{i_2}(e_x)]}{\sum_{i_1}^{n_1}\sum_{i_2}^{n_2}[\mu_{A_1}{}^{i_1}(e_x)\mu_{A_2}{}^{i_2}(e_x)]} \tag{7}$$

3-4. Learning Algorithm

The goal of training algorithm is to adjust the fuzzy controller weights through the minimization of following cost function:

$$E = \frac{1}{2}e^2 \tag{8}$$

Where

$$e = u_{CFC} = u_T - u_F \tag{9}$$

U_T is the final control signal and U_F is the fuzzy controller output. In fact, it is desirable that the output of CFC controller (U_{CFC}) reaches to zero. By using the back propagation (BP) learning algorithm, the adjustable fuzzy parameters of the fuzzy controller is adjusted in such a way that the error defined in (8) is less than a desired threshold value after a given number of training cycles. The well-known BP algorithm may be written briefly as:

$$\theta(k+1) = \theta(k) - \eta\left(\frac{\partial E(k)}{\partial \theta(k)}\right) \tag{10}$$

where θ and η represent the learning rate and tuning parameter of fuzzy controller, respectively. Figure 4 shows structure of the controller for velocity control electro hydraulic servo system

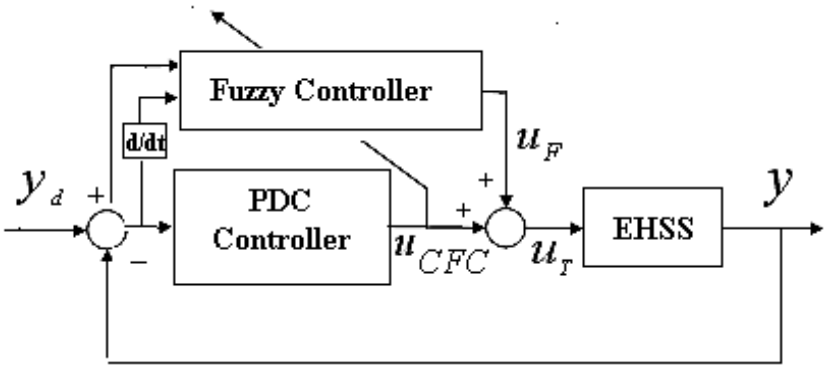

Figure 4: structure of the controller for velocity control EHSS

Before starting the design, a coordinate transformation:

$$z_i = x_i - x_{iN} \quad \forall i = 1,2,3; \qquad v = u - u_N \tag{11}$$

.....

is introduced to rewrite equation (1). Therefore our system denoted by [5]:

$$\dot{z}_1 = \frac{1}{j_t}\{-B_m z_1 + q_m z_2\}$$
$$\dot{z}_2 = \frac{2\beta_e}{V_o}\{-q_m z_1 - (c_{im} + \gamma(z_z))z_2 + c_d w x_3\sqrt{\frac{1}{\rho}(p_s - x_{2N} - z_2)}\} \quad (12)$$
$$\dot{z}_3 = \frac{1}{T_r}\{-z_3 + \frac{K_r}{K_q}v\}$$

Where

$$,\gamma(z_2) = \frac{c_d w x_{3N}}{\sqrt{\rho(p_s - x_{2N} - z_2)} + \sqrt{\rho(p_s - x_{2N})}} \geq 0$$

Since x(0)=0, $x_1>0$ and $x_3>0$ is considered, the values of the state space variable can be assumed as[5]:

$$\{x_1, x_2, x_3\} \in [0, x_{1\max}] \times [0, p_s) \times [0, x_{3\max}] \quad (13)$$

Where

$$x_{1\max} = 404\frac{rad}{s}, p_s = 10^7\, pa, x_{3\max} = 4\times 10^{-4}\, m$$

Equation (12) is defined as:

$$\{z_1, z_2, z_3\} \in [-x_{1N}, x_{1\max} - x_{1N}] \times [-x_{2N}, p_s - x_{2N}) \times [-x_{3N}, x_{3\max} - x_{3N}] \quad (14)$$

There are two nonlinearity terms in the equation (12), as is shown below:

$$q_1(t) = \gamma(z_2) \quad (15)$$
$$q_2(t) = \sqrt{\frac{1}{\rho}(p_s - x_{2N} - z_2)} \quad (16)$$

But given that the state space (z_2(t)) is a nonlinear term, then:

$$q(t) = z_2(t)$$

The T-S model based on equation (12) is as follows:

Model Rule 1:

IF Z_2(t) is min, THEN:

$$\dot{x} = A_{\min} x(t) + B_{\min} u(t)$$

Where, $$A_{\min} = \begin{pmatrix} \frac{-B_m}{j_t} & \frac{q_m}{j_t} & 0 \\ \frac{-2\beta_e q_m}{V_o} & \frac{-2\beta_e}{V_o}(c_{im} + \min(z_2)) & \frac{2\beta_e}{V_o}(c_d w \min(z_2)) \\ 0 & 0 & \frac{-1}{T_r} \end{pmatrix}, B_{\min} = \frac{K_r}{K_q T_r}\begin{pmatrix} 0 \\ 0 \\ 1 \end{pmatrix}$$

Model Rule 2:

IF $Z_2(t)$ is max, THEN

$$\dot{x} = A_{\max} x(t) + B_{\max} u(t)$$

Where,

$$A_{\max} = \begin{pmatrix} \frac{-B_m}{j_t} & \frac{q_m}{j_t} & 0 \\ \frac{-2\beta_e q_m}{V_o} & \frac{-2\beta_e}{V_o}(c_{im} + \max(z_2)) & \frac{2\beta_e}{V_o}(c_d w \max(z_2)) \\ 0 & 0 & \frac{-1}{T_r} \end{pmatrix}, B_{\max} = \frac{K_r}{K_q T_r}\begin{pmatrix} 0 \\ 0 \\ 1 \end{pmatrix}$$

This T-S fuzzy model exactly represents nonlinear system in the region on the space. From the maximum and minimum values, q(t) can be represented by:

$$q(t) = z_2(t) = M_{11} q(t) \cdot \min(z_2) + M_{12} q(t) \cdot \max(z_2) \tag{17}$$

Where,

$$\min z_2 = -1.3164 \times 10^6, \max z_2 = 7.6836 \times 10^6 \tag{18}$$

$$M_{11} q(t) + M_{12} q(t) = 1 \tag{19}$$

Therefore the membership functions are calculated as follows:

$$M_{11} q(t) = \frac{1.3164 \times 10^6 + q(t)}{9 \times 10^6} \tag{20}$$

$$M_{12} q(t) = \frac{7.6836 \times 10^6 + q(t)}{9 \times 10^6} \tag{21}$$

The membership functions are shown in Figure 5.

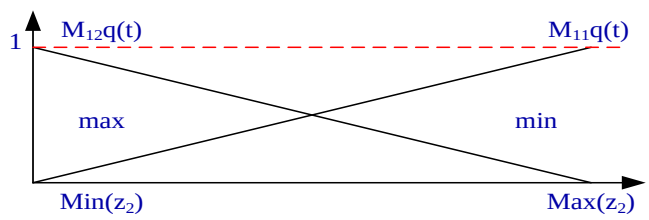

Figure 5: Membership functions $M_{11}q(t)$ and $M_{12}q(t)$

For the fuzzy models according to the equations (17) and (18) the PDC controller rules are as follow:
Control Rule 1:

IF $z_2(t)$ is min, THEN $u(t) = -F_1 z(t)$ (22)

Control Rule 2:

IF $z_2(t)$ is min, THEN $u(t) = -F_2 z(t)$ (23)

Whereas, [F_1, F_2] are the local feedback gains, which should be determined using global design conditions. The global design conditions are needed to give assurance of the global stability and control performance. In this paper, feedback gains are determined with Linear Matrix Inequality (LMI) theorem.

The overall fuzzy controller is:

$$u(t) = \frac{\sum_{i=1}^{r} -w_i(t) F_i z(t)}{\sum_{i=1}^{r} w_i(t)} = -\sum_{i=1}^{r} H_i z(t) F_i z(t), r = 1,2 \tag{24}$$

Where,

$$w_i(t) = \prod_{j=1}^{p} M_{ij}(q(t)), p = 1,2 \tag{25}$$

4. Simulation Results

In this effort the efficiency of control process is shown using proposed controller. As it can be observed in Figure 6, the proposed controller is stable and it can control the velocity of EHSS efficiently with settling time of 3.7 s.

The feedback gains Fi can be obtained as:

$$F_1 = [0.0116 \quad 0.1025\text{e-}13 \quad -.2658\text{e-}4]$$
$$F_2 = [0.0036 \quad .032\text{e-}13 \quad -0.2658\text{e-}4]$$

Using the LMI optimization algorithm, one common p matrix for two rules is obtained and the results show the stability of control performance.

$$p = \begin{pmatrix} 637\times10^{7} & 0.0114\times10^{-7} & 1 \\ 0.0114\times10^{-7} & 1\times10^{-20} & 0 \\ 1 & 0 & 1 \end{pmatrix} > 0,$$

Arbitrary constant value and the initial condition of EHSS which described previously are set as follow:

$$x_{1N} = 200\frac{rad}{s} \quad , x(0) = 0$$

Also the learning rate of fuzzy controller for structure of controller is chosen as:

$$\eta = .007$$

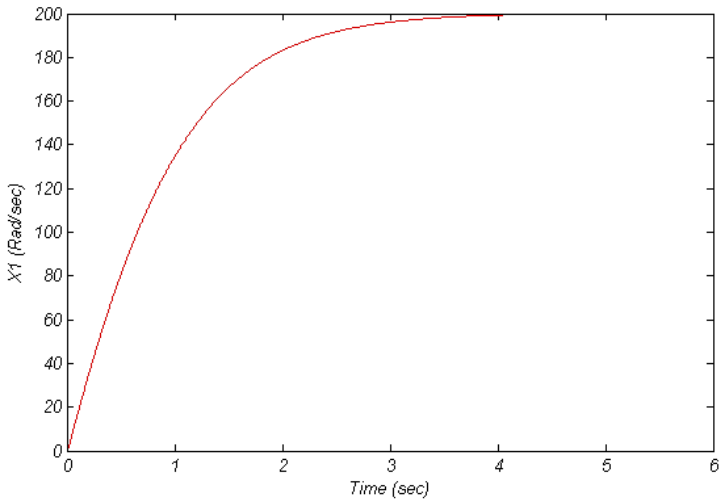
X1 (Rad/sec)
Time (sec)

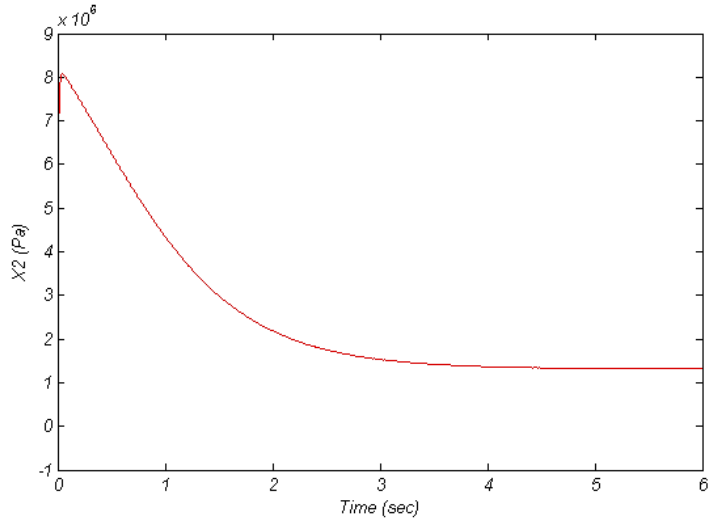
x 10^6
X2 (Pa)
Time (sec)

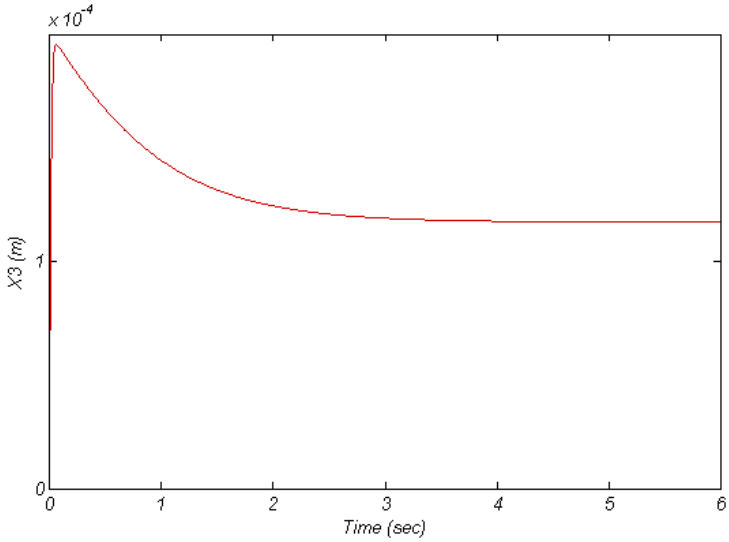
x 10^-4
X3 (m)
Time (sec)

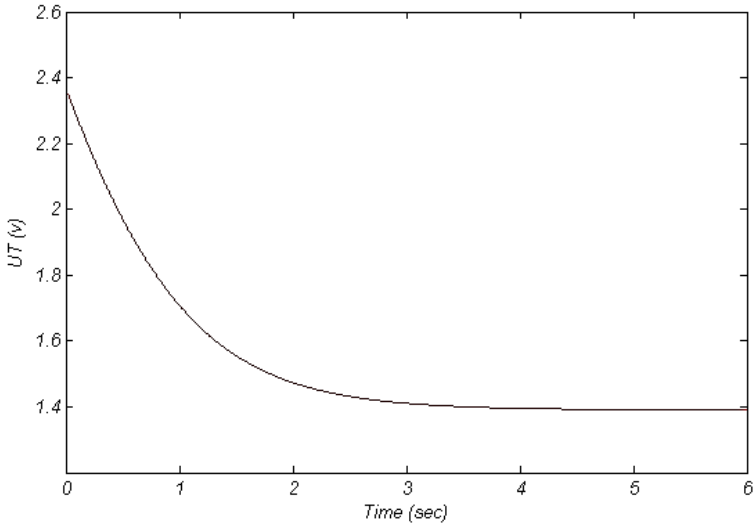

Figure 6:. Simulation results of the system for x_1, x_2, x_3 and u

4-1 Comparison of Controllers

Velocity control of an Electro-Hydraulic Servo System in the presence of flow nonlinearities and internal friction.

Comparing this method with other controllers shows that:

The control signal controller (u) is better than FNN, RBFSMC, MLP, CMAC and DSMFNN controller.

Mathematical computation and designing of the controller are easier than nonlinear control (feedback linearization) and DSMFNN Controller.

The settling time controller is about 3.7 sec, showing a better response than MLP Neural network, Fuzzy neural network, CMAC controller and nonlinear controller.

However, the settling time of DSMFNN controller reaches 2s, but it needs large number of fuzzy rules which increases the complexity of controller. Also the value of control signal is increased to 28v which is inappropriate.

At the end, the proposed controller can be reached the inverse model of system by using the feedback error learning method. Also stability of controller is validated by LMI method.

Conclusion

The control of electro hydraulic system is an important feature in many industrial applications. To properly control the system, many intelligent controllers are presented in recent years. This approach proposes an efficient for velocity control of an Electro-Hydraulic Servo System in the presence of flow nonlinearities and internal friction. In this article parallel distributed compensation and fuzzy controller are proposed for controlling the velocity of EHSS. The experiments and results showed that proposed method can control the process efficiently with better performance than other methods. This controller introduces better settling time by using small control signal. The proposed controller can be reached the inverse model of system by using the feedback error learning method. Also stability of controller is validated by LMI method.

ACKNOWLEDGEMENTS

This work was supported by Young Researchers and Elite Club the BuinZahra Branch, Islamic Azad University. The authors would like to thank them for their unwavering support.

References

[1] J. Watton, Fluid power systems: modelling simulation and microcomputer control, , Englewood Cliffs, N.J.: Prentice-Hall, pp. 323-345, 1988.
[2] H. E. Merritt, Hydraulic control systems, New York,: Wiley, 1967.
[3] . D Mc cloy, & H.R Martin,"The Control of Fluid Power",J.Wiley , 1973.
[4] R, Liu,"Nonlinear Control of Electro-Hydraulic Servo Systems: Theory and Experiment", Tsinghua University, 1994
[5] M. Jovanovic, Nonlinear control of an electrohydraulic velocity servo system, in Proceeding of, Vol.1, pp. 588-593, 2002.
[6] S. A. Mohseni, M. Aliyari, M. Teshnehlab, EHSS Velocity Control by Fuzzy Neural Networks, in Proceeding of, pp. 13-18, 2006.
[7] H. Azimian, R. Adlgostar, M. Teshnehlab, Velocity control of an electro hydraulic servomotor by neural networks, in Proceeding of, pp. 677-682, 2005.
[8] L. C. Y. Chan, S. F. Asokanthan, CMAC based controller for hydromechanical systems, in Proceeding of, Vol.6, pp. 4496-4501, 2001.
[9] S. A. Mohseni, M. Aliyari Shooredeli, M. Teshnehlab, Decoupled sliding-mode with fuzzy neural network controller for EHSS velocity control, in Proceeding of, pp. 7-11, 2007.
[10] M. Kawato, "Computational schemes and neural network models for formation and control of multijoint arm trajectory" in W. T. Miller, R. S. Sutton, and P. J. Werbos, Neural networks for control, The MIT Press, 1990.
[11] H. Miyamoto, M. Kawato, T. Setoyama and R. Suzuki, "Feedback error learning neural network for trajectory control of a robotic manipulator Neural Networks", Vol. 1, pp. 251-265, 1988.
[12] M.R Asadi Asad Abad, A. R Zare Bidaki, M. Jahanshahi. Velocity Control Of Electro-Hydraulic Servo System by Tracking Method. International Journal of Smart Electrical Engineering, Vol. 1, No. 3. Pp 1-6. 2014
[13] H. O. Wang, K. Tanaka, M. Griffin, Parallel distributed compensation of nonlinear systems by Takagi-Sugeno fuzzy model, in Proceeding of, Vol.2,pp. 531-538, 1995.
[14] K. Tanaka, H. o. Wang, Fuzzy Control Systems Design and Analysis,pp. 5-81, New York,: Wiley, 2001
[15] M. Sugeno and G. T. Kang, ''Fuzzy Modeling and Control of Multilayer Incinerator,''Fuzzy Sets Syst., No. 18, pp. 29_346, 1986.
[16] K. Tanaka and M. Sugeno, ''Stability Analysis and Design of Fuzzy ControlSystems'' Fuzzy Sets Syst., Vol. 45, No. 2, pp. 135_156, 1992.

Authors

Amir Reza Zare Bidaki has master certificate in control engineering and at present he is student PHD in science and research university of Tehran. His papers published in IFAC, IJSEE and MJMS. His works are in design fuzzy controller and identification of models.