Vol. 5(15) Apr. 2015, PP. 2109-2119

Contents list available at IJMEC

International Journal of Mechatronics, Electrical and Computer Technology (IJMEC)

Journal Homepage: www.aeuso.org

PISSN: 2411-6173 - EISSN: 2305-0543

Numerical Study of Blade Number Effect on the Performance of a 3D FC Centrifugal Fan

A. Amjadimanesh[1*], H. Ajam[2] and A. Hossein Nezhad[1]

[1] *Department of Mechanical Engineering, University of Sistan and Baluchestan, Zahedan, Iran*

[2] *Mechanical Engineering Department, Ferdowsi University of Mashhad, Mashhad, Iran*

***Corresponding Author's E-mail:** amjadimanesh_amir@yahoo.com*

Abstract

A 3D forward curved (FC) centrifugal fan with airfoil blades is simulated numerically to predict the turbulent flow and pressure field of the fan. Through this numerical simulation, the influence of blade number on the fan performance is surveyed. In numerical analysis, finite volume method (FVM) is used to solve the governing equations. The numerical results are validated with experimental data. It is observed that the 20 is the most efficient blade number for this type of fan. Also least square method is used to optimize the blade number. This optimization predicts 21 blade number as the most efficient one.

Keywords: *Blade number, optimization, centrifugal fan, performance curve, CFD.*

1. Introduction

Because of wide industrial applications of centrifugal fans, the efficiency of these fans may have great influence on the energy consumption. Since the blades are one of the important parts that convert kinetic energy to pressure in the fan, refining their number may improve the performance. Experimental analysis is expensive and time consuming due to constructing and testing physical prototypes in a trial-and-error process, thus reducing the profit margins of the manufacturers. For this reason, CFD analysis with suitable turbulence modeling currently has more benefits than experimental works. Numerical simulations can provide quite accurate information on the fluid behavior in the machine, and thus help the engineer obtain a thorough performance evaluation of a particular design. Some of the recent investigations in this field are as follows. Jafarzadeh and Alishahi in 2007 [1] simulated a high speed centrifugal pump. They compared numerical results with available experimental data. The effect of blade number on the efficiency was considered by three different (5, 6 and 7) blade numbers. Three turbulence models (standard k-ε, RNG k- ε and RSM) were applied to choose the suitable model. They introduced RNG k- ε and 7 blades as the most suitable and efficient model and blade number. Lin and Huang in 2001 [2] investigated a forward curved centrifugal fan with airfoil NACA4412 blades by STAR-CD CFD code and validated their numerical results with experimental data. They considered three blade inlet angles to find the most efficient one. Their results indicated that 16.5° blade inlet angle resulted in the highest efficiency for the fan. Tsai and Wu in 2006 [3] modeled a small centrifugal fan and compared numerical and experimental results. They simulated three dimensional turbulent flow of the fan at steady state situation. They also observed that increasing the rotational speed of the rotor leads to the higher mass flow rate and static pressure. Younsi and coworkers in 2007 [4] studied (numerically and experimentally) the influence of the impeller geometry on the unsteady flow in a centrifugal fan. Three types of impeller (irregular blade spacing, different blade number, smaller inlet diameter of the impeller) were compared with a reference impeller to evaluate the influence of impeller geometry on

Article History:

Received Date: Jan. 06, 2015
Accepted Date: Mar. 08, 2015
Available Online: Apr. 09, 2015

performance of the fan. Wang and coworkers in 2009 [5] numerically simulated a G4-27 centrifugal fan (a backward airfoil blade centrifugal fan). They chose efficiency as an objective function and did an optimization analysis by the least square method assuming the blade number and blade angle as variable quantities. Their optimization results showed that the performance of centrifugal fan is improved by reducing the energy loss which induced by the secondary flow vortex, the volute tongue, the wake-jet and the angle of attack. Optimization results predicted that the maximum efficiency (76.85%) occurs in 14 blade number and 44.5° blade angle.

Singh and coworkers in 2011 [6] investigated effects of backward centrifugal fan parameters (such as blade number, outlet blade angle and diameter ratio) on performance thorough experiments and CFD simulations. They used the concept of MRF (moving reference frame) to obtain flow field in the rotating region. They simulated two backward centrifugal fans with different blade numbers and compared the results with experiments to validate their model. In order to study effects of blade number on the performance of the fan, they simulated four other blade numbers for this backward centrifugal fan. They reported that increase in the number of blade increases the flow coefficient and efficiency.

Lee and coworkers in 2011 [7] presented numerical CFD optimization with experiential steering technique to redesign the backward centrifugal fan profile, inlet duct and shroud of the impeller. The goal of optimization was to reduce power consumption while maintaining a specified output pressure at the lift-side volute exit. The design modification was completed by decoupling the impeller from volute. The 2D blade profile optimization based on numerical coupling between a CFD calculation and a genetic algorithm optimization scheme was able to achieve a composite objective with a projected shaft power and a power output.

Pranav and Raj in 2012 [8] numerically designed and parametrically optimized the volute casing of a backward airfoil blade (NACA2424) centrifugal fan. They presented the design methodology. The concept of MRF was used in the CFD analysis for rotating region around the impeller. The volute casing was optimized by decreasing the volute clearance and increasing the cut off height and keeping it at 35% of impeller diameter.

According to Bruno [9] the most efficient number of blades in fan cannot be determined theoretically. However, it is time consuming and costly to determine number of blades experimentally as it requires large number of prototypes of fan to be made. CFD has become an important tool to investigate such kind of problems.

A few of the previous works includes a complete numerical study of FC centrifugal fan with considering; 3D modeling, interaction between rotor and stator in full domain and the effects of different blade numbers.

The main objective of this paper is to study the effects of blade numbers on the flow field and efficiency of a 3D FC centrifugal fan. In each case, characteristics parameters of fan are determined and compared. In addition, an optimization blade number method is developed and based on, the efficient blade number is proposed.

2. NUMERICAL SCHEME AND GOVERNING EQUATIONS

The flow in the fan is turbulent and is assumed to be steady and incompressible. The present simulation uses a numerical simulation based on finite volume method with a commercial CFD code. Governing equations include conservation and momentum equations (Eq.1, 2, 3) and two transport equations for turbulence kinetic energy and turbulence dissipation, RNG k-ε model (Eq.4, 5). Equations (6) through (11) explain some variables of first five equations. For rotor region, rotating reference frame and for stator region, stationary reference frame are used [10]. No slip boundary condition is utilized on the walls. The atmospheric conditions are set as the boundary conditions at both the inlet and outlet of fan.

The equations of Conservation; mass, momentum, turbulent kinetic energy and turbulent dissipation rate are as followed (respectively) [11]:

$$\nabla.(\rho\vec{v}) = 0 \tag{1}$$

$$\nabla.(\rho\vec{v}\vec{v}) = -\nabla p + \nabla.(\bar{\bar{\tau}}) \qquad \text{For stator region} \tag{2}$$

$$\nabla.(\rho\vec{v}_r\vec{v}_r) + \rho(2\vec{\omega}\times\vec{v}_r + \vec{\omega}\times\vec{\omega}\times\vec{r}) = -\nabla P + \nabla\bar{\bar{\tau}} \qquad \text{For rotor region} \tag{3}$$

$$\frac{\partial}{\partial(x_i)}(\rho v_i k) = \frac{\partial}{\partial x_j}\left[(\mu + \frac{\mu_t}{\sigma_k})\frac{\partial k}{\partial x_j}\right] + G_k - \rho\varepsilon \tag{4}$$

$$\frac{\partial}{\partial(x_i)}(\rho v_i \varepsilon) = \frac{\partial}{\partial x_j}\left[(\mu + \frac{\mu_t}{\sigma_\varepsilon})\frac{\partial \varepsilon}{\partial x_j}\right] + C_{1\varepsilon}\frac{\varepsilon}{k}G_k - C^*_{2\varepsilon}\frac{\varepsilon^2}{k} \tag{5}$$

$$\bar{\bar{\tau}} = \mu\left[(\nabla\vec{v} + \nabla\vec{v}^T) - \frac{2}{3}\nabla.\vec{v}I\right] \tag{6}$$

$$\mu_t = \rho C_\mu \frac{k^2}{\varepsilon} \tag{7}$$

$$C^*_{2\varepsilon} = C_{2\varepsilon} + \frac{C_\mu (Sk/\varepsilon)^3 (1 - (Sk/\varepsilon\eta_0))}{1 + \beta(Sk/\varepsilon)^3} \tag{8}$$

$$S_{ij} = \frac{1}{2}\left(\frac{\partial u_j}{\partial x_i} + \frac{\partial u_i}{\partial x_j}\right) \tag{9}$$

$$S \equiv \sqrt{2S_{ij}S_{ij}} \tag{10}$$

$$G_k = \mu_t S^2 \tag{11}$$

Where $\bar{\bar{\tau}}$, k, ε, G_k, and S_{ij} are shear stress tensor, turbulent kinetic energy, turbulent dissipation rate, generation of turbulent kinetic energy due to mean velocity gradients and mean strain rate, respectively and turbulent constants are [11]:

$$C_{1\varepsilon} = 1.42, C_{2\varepsilon} = 1.68, C_\mu = 0.0845, \sigma_k = 0.7194, \sigma_\varepsilon = 0.7194, \eta_0 = 4.38, \beta = 0.012$$

The values of all constants (except β) are derived explicitly in the RNG procedure. Only β is derived from experiment.

The SIMPLE algorithm is used for the purposes of coupling between pressure and velocity and of satisfying the mass and momentum conservation laws. Also the convective terms are discretized with the second-order upwind scheme. In the second-order approach, higher-order accuracy is achieved at cell faces through a Taylor series expansion of the cell-centered solution about the cell center [12].

3. Fan specification

The fan investigated here is shown at Figure 1. This fan is a forward curved centrifugal fan with 17 blade number and 16.5° inlet blade angle (according to Reference [2] among angles of 0°, 16.5°, 26.5° the angle (16.5°) is the most efficient one) which is used for cooling the notebook computers. Its other basic geometric parameters are presented in table 1.

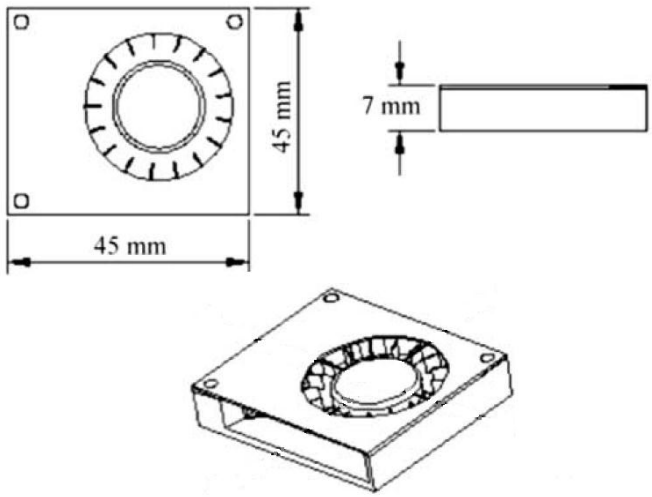

Figure 1: Fan geometry [2]

TABLE 1: Basic geometrical parameters of fan

Blade number	17	Blade inlet radius	13 mm
Blade angle	16.5	Blade outlet radius	16.4 mm
Blade chord length	3.4 mm	Inlet area	π×16.5×16.5 mm^2
Rotational speed	5000 rpm	Outlet area	45×6.2 mm^2
Blade height	4.2 mm	Blade thickness	0.75 mm

The base blade shape is airfoil NACA4412 (Figure 2). To evaluate the influence of blade numbers on performance of the fan, 15, 20, 23 and 25 blade numbers are chosen for investigation (moreover base blade number (17)). Because of it is focused only on the blade number, other parameters of the fan like rotational speed and inlet angle are assumed constant in all the cases. The basic rotational speed of fan is 5000 rpm.

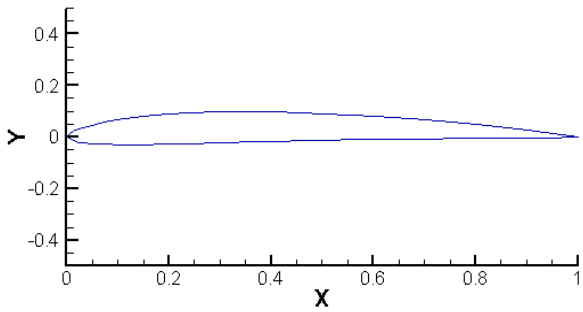

Figure 2: Blade geometry NACA 4412

4. Grid generation

The grid system for the fan is shown in Figure.3. Figure. 3(a) shows the overall scheme of grid system. Figure. 3(b) demonstrates grid system in top view and Figure 3(c) represents mesh of airfoil blades in rotor regions. Stator and rotor grid generation are performed separately and then joined to each other. Hexahedral mesh is used in stator region to obtain better accuracy. Regarding to the complex geometry of the rotor a high quality unstructured mesh is used for this region. The quality of

mesh generation is checked of aspect ratio and skewness. The aspect ratio of 100 percent of grids are in the range of 1 and 5 and the skewness of about 90 percent of grids are lower than 0.5 (High quality grid generation).

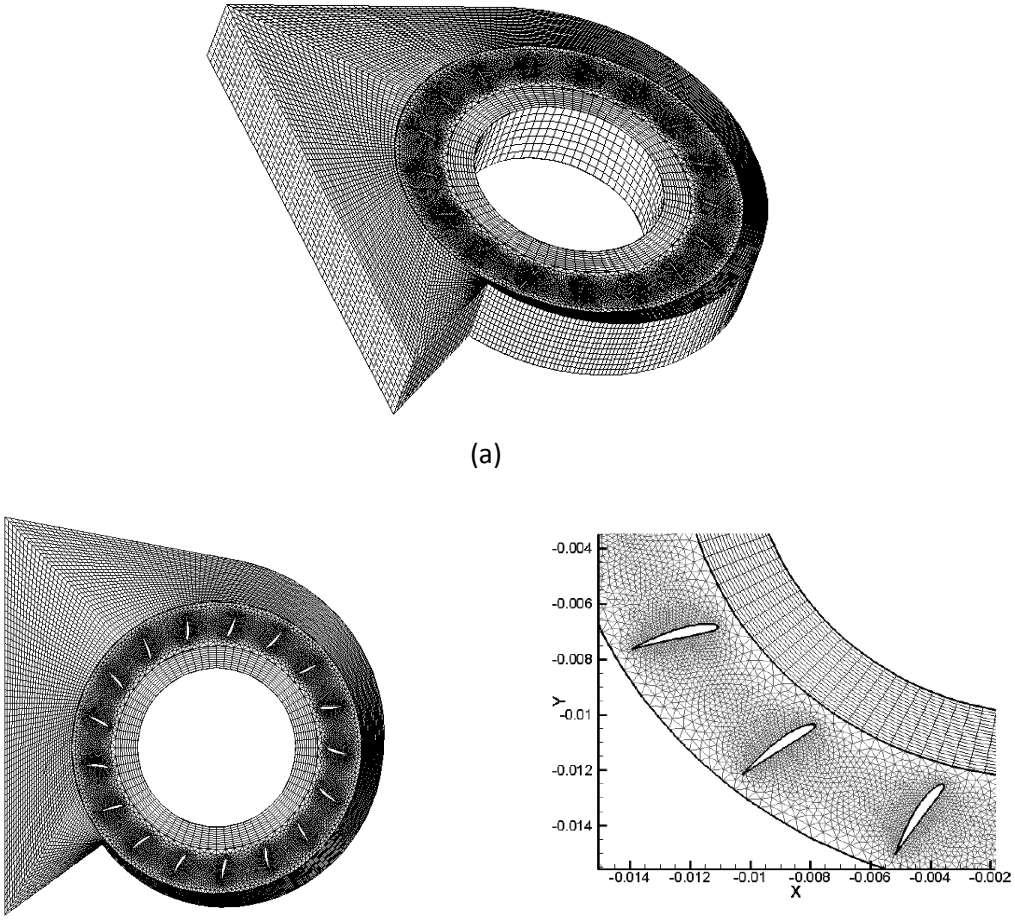

(a)

(b) (c)

Figure 3: Grid system airfoil blade: a) 3D mesh. b) Mesh in horizontal plane. c) Rotor region in horizontal plane

In order to capture the details of the flow field, around the walls and high velocity and pressure gradient region the mesh number is increased.

5. Grid study

It must be shown that the numerical results are independent of grid size. For this means, mesh number is increased by the factor of two, and variation of volume flow rate of fan is computed. Figure 4 shows the variation of static pressure of fan with volume flow rate (performance curve) for a set of mesh numbers. As shown, the results between 504000 and 1050000 mesh number are close to each other. (Results have obtained in atmospheric pressure outlet, 17 blade number and 5000 rpm).

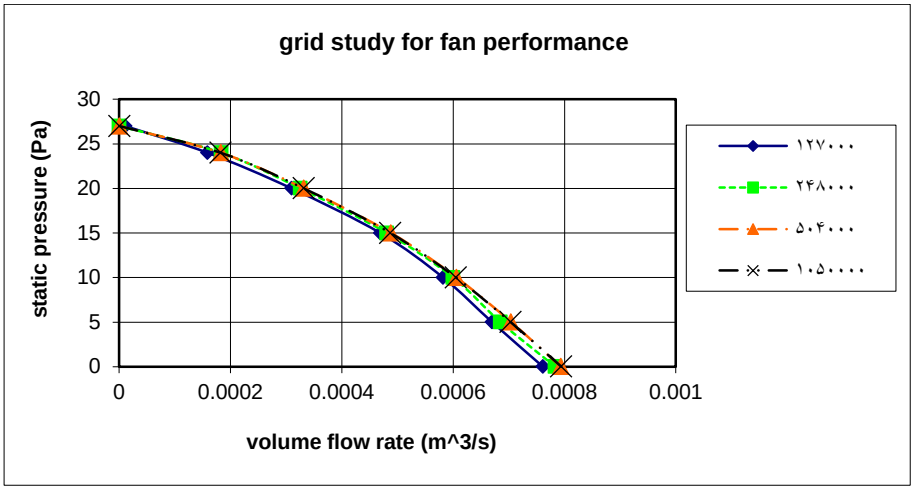

Figure 4: Grid study for fan performance

Table 2 also represents that variation of results with increasing the mesh number from 504000 to 1050000 is negligible and the error is 0.11% (error percentage is computed against previous grid numbers, not against experimental data). Therefore regarding to computational cost, the 504000 mesh number is appropriate and sufficient (it is noted that grid study results for other numbers of blades are very similar to these results, so has been eliminated to avoid repetition).

TABLE 2: grid study

Grid number	Max. volume flow rate(m^3/s)	Percent change
127000	7.413×10^{-4}	-
248000	7.834×10^{-4}	5.67 %
504000	7.934×10^{-4}	1.27 %
1050000	7.943×10^{-4}	0.11 %

6. Validation

To validate numerical simulation, numerical results are compared with experimental data reported in reference [2]. Since performance curve (static pressure versus volume flow rate), presents general characteristic of centrifugal fans, this curve has been chosen to validate numerical results with experimental data. According to Figure 5 numerical and experimental results are in good agreement and the maximum error percentage occurs about 15Pa static pressure which is less than 4%.

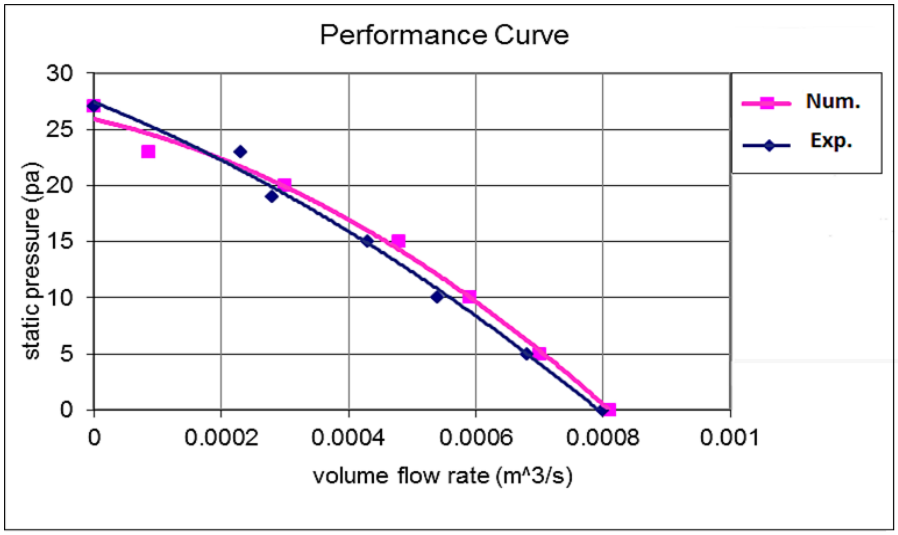

Figure 5: Validation of numerical results with experimental data

7. Result and discussion

At first, five numbers of blades (15, 17, 20, 23 and 25) are considered to study. The results are presented in the form of performance curve (Figure 6), power (Figure 7) and efficiency of fan (Figure 8). For this purpose non-dimensional numbers such as power coefficient, flow coefficient and efficiency are defined as follows [13]:

$$\hat{P} = \frac{P}{\rho N^3 D^5} = \frac{\vec{T}.\vec{\omega}}{\rho N^3 D^5} \quad \text{Power coefficient} \quad (12)$$

$$\Phi = \frac{Q}{ND^3} \quad \text{Flow coefficient} \quad (13)$$

$$\eta = \frac{\Phi \Psi}{C_P} = \frac{Q.\Delta P}{\vec{T}.\vec{\omega}} \quad \text{Efficiency} \quad (14)$$

$$\Psi = \frac{\Delta P}{\rho N^2 D^2} \quad \text{Head} \quad (15)$$

Where $\vec{T}$, $\vec{\omega}$ and ΔP are torque of the shaft, rotational speed vector and variation of pressure throughout the fan, respectively.

Figure 6 demonstrates that static pressure increases with reduction of volume flow rate, and the behavior of all blade numbers are similar. Moreover, it shows that more blade numbers are better in guidance of fluid through the fan and so the flow rate of fan increases in these cases. Figure 7 demonstrates that energy consumption of fan also increases in more blade numbers (due to friction between blades and air) and the power of fan for 25 blades is greater than other blades numbers. Therefore to achieve high performance of fan a suitable balance should be applied between guidance of fluid and friction.

Total results may be presented in the form of efficiency graph. Figure 8 indicates that the maximum efficiency (24%) occurs for 20 blades in the flow coefficient of about 0.023. In other words, positive effectiveness of flow guidance overcomes the negative influence of friction.

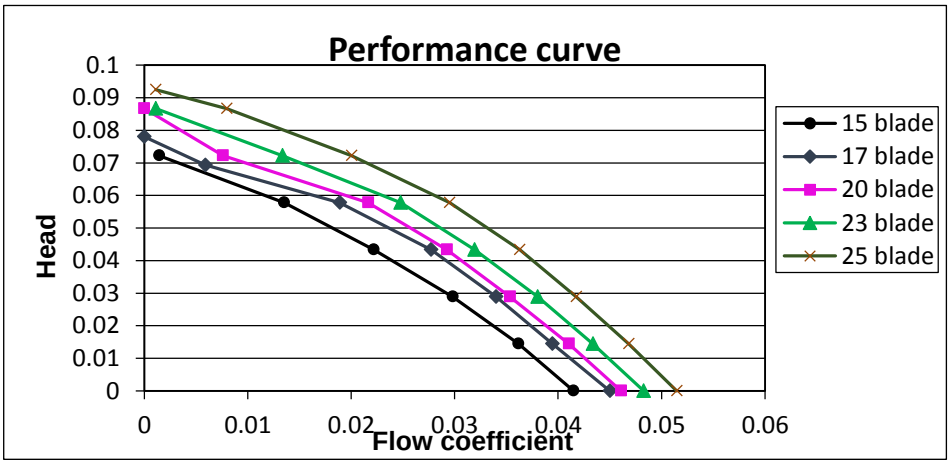

Figure 6: Performance curve for various blade numbers

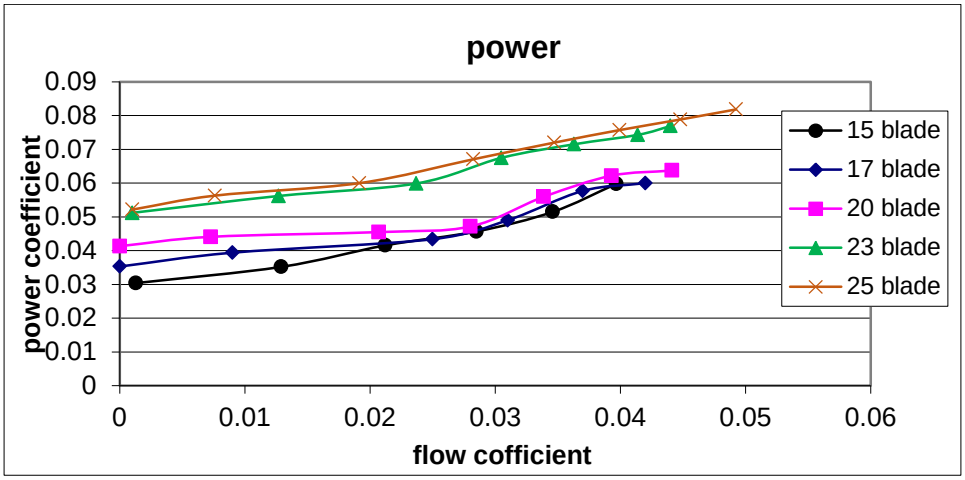

Figure 7: Power coefficient for various blade numbers

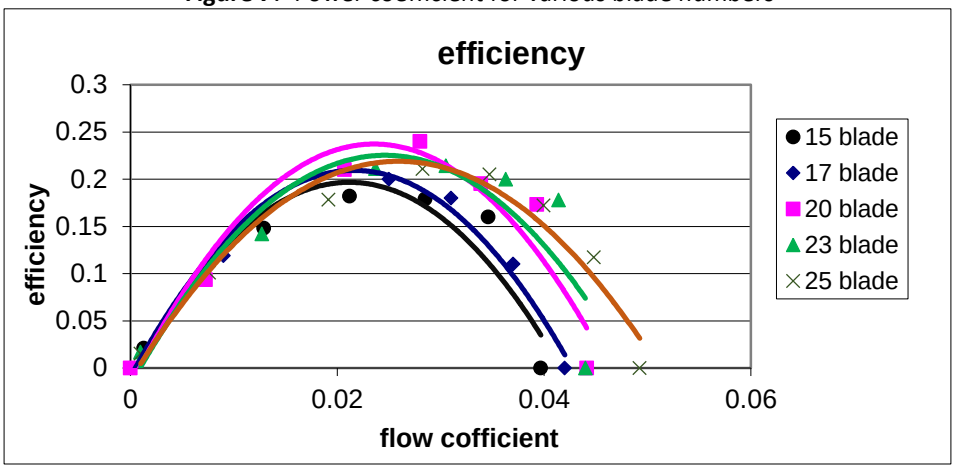

Figure 8: Efficiency for various blade numbers

Velocity contours and stream line diagram at the horizontal mid plane of fan, for the case of 20 numbers of blades, are presented in Figure 9. This figure shows details of velocity flow field in the fan. Because of the similarity of flow pattern for other number of blades, only the 20 blade velocity contours are presented. Figure 9(a) shows that, the inlet fluid is sucked into the fan and turns with the rotating rotor, the entrance flow changes from axial at the mouth of the inlet to radial at the back plate, and a significant recirculation pattern exists near the inlet zone. Thereafter, the flow leaves this region to enter the rotor and to receive the energy by means of contact with blade surfaces. Finally, all the flows are collected in the housing and discharged from the outlet. As shown in the Figure 9(a) the velocity magnitudes in the front of blades are less than the back of the blades (note the fact that pressure values in the front of blade are more than the back of blade). Also velocity magnitudes gradually increase from inside to outside and the maximum speed is about 9m/s. Figure 9(b) demonstrates streamlines of flow in the horizontal mid plane. As shown in Figure 9(b) the recirculation occurs in the outlet of fan where the direction of outlet plane and blades (that conduct the fluid) is not matched to each other.

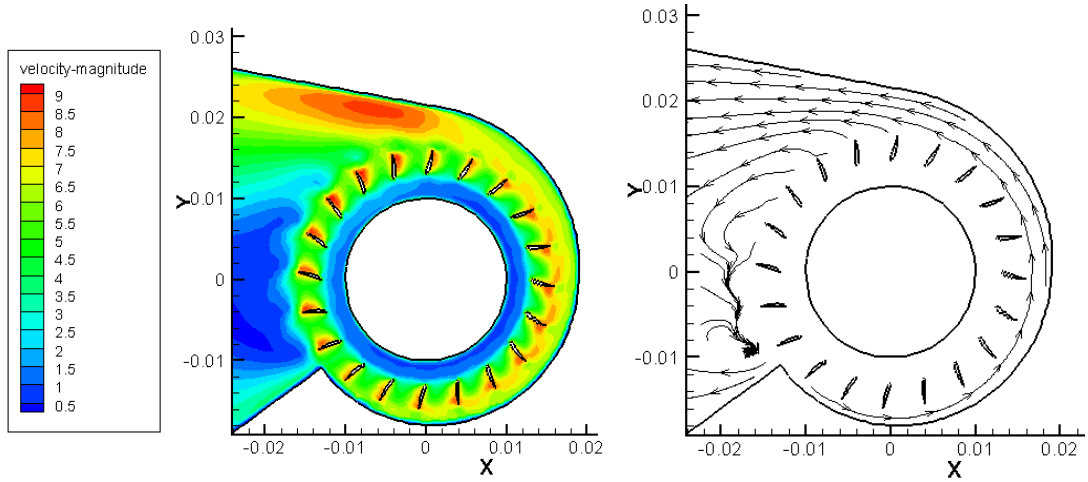

(a) (b)

Figure 9: Calculated velocity distribution of 20 blades: a) Velocity magnitude contour b) Stream lines of flow field

To attain a clear visualization of flow pattern, the pressure distributions inside the blade passage are demonstrated in Figure 10. As shown in this figure pressure distribution of all blade numbers are very similar. On the concave surfaces (front surfaces) of all blades, positive relative static pressures are observed. Conversely, on the convex surfaces (back surface) of blades, negative relative static pressures are observed. Maximum relative static pressure is about 40 Pa and occurs at the tip of concave surfaces of blades, where minimum relative static pressure is about -110 Pa in convex surfaces.

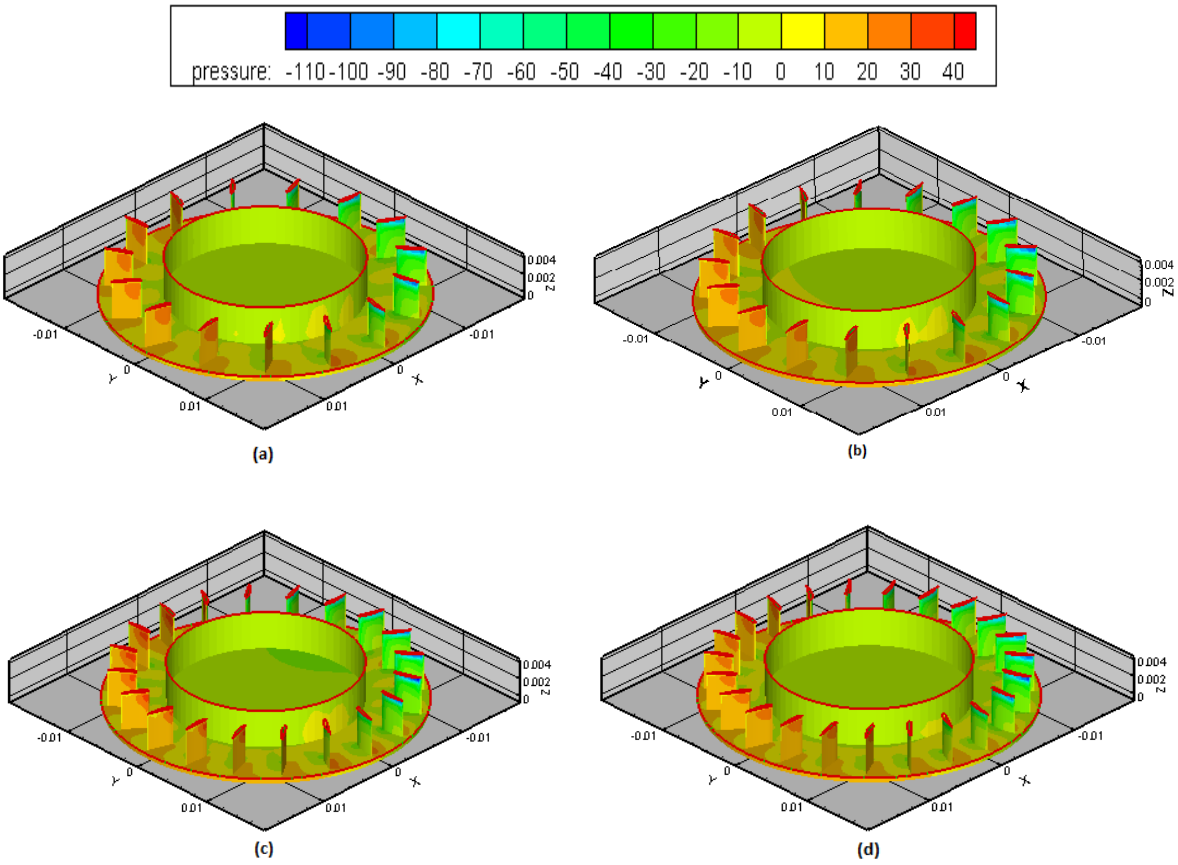

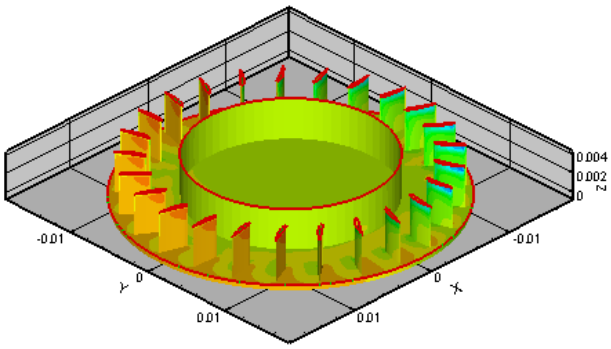

(e)

Figure 10: Relative Static pressure contours on rotors (Pa): a) static pressure contour for 15 blade. b) Static pressure contour for 17 blade. c) Static pressure contour for 20 blade. d) Static pressure contour for 23 blade. e) Static pressure contour for 25 blade

8. Optimization

In order to predict the fan performance in other blade numbers an optimization has been applied by the method of least square curve fitting. In this optimization, efficiency η has been taken as a maximizations goal and blade numbers Z have been considered as variable quantity. Wide range of variation of blade number may help attain integral scheme. Range of blade number (Z) is changed from 10 to 30 to attain integral viewpoint. So, in Figure 11, maximum efficiency which obtained for each blade number is plotted versus its blade number and the best curve is fitted. As shown in figure 11 optimization predicts 21 blades as the efficient blade number. In this blade number maximum efficiency is about 25%.

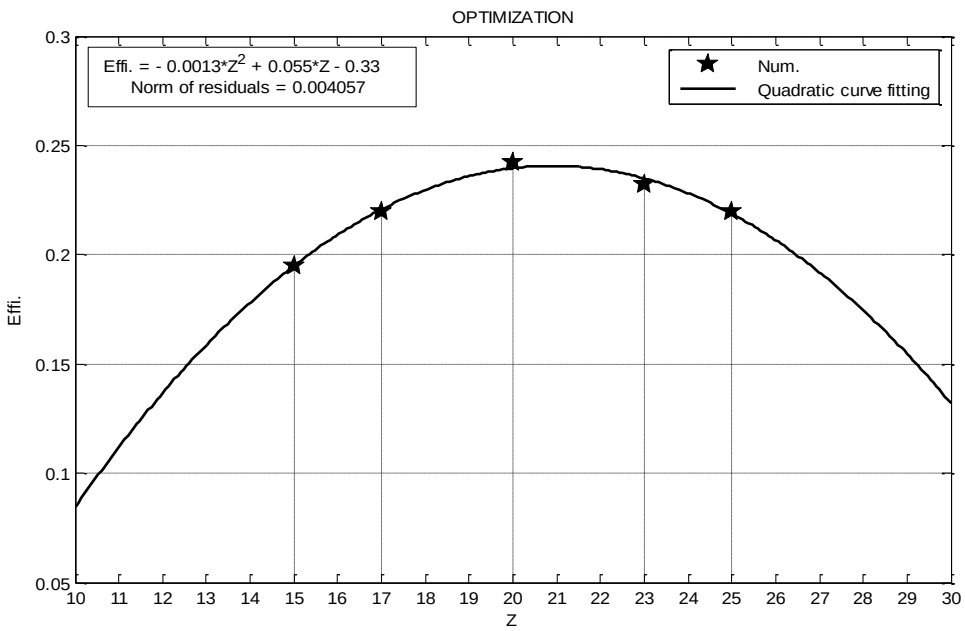

Figure 11: least square method optimization

CONCLUSION

In this paper a forward curved centrifugal fan was numerically simulated and its performance curve was compared with experimental data. Regarding to the good agreement of these results, the present numerical modeling of fan may predict the flow field of fan with details. Therefore, expensive cost of experimental works can be avoided by using fluid dynamics. Then, influence of blade number on performance of the fan was studied. From this simulation, the 20 blade numbers was obtained as the most efficient blade number. Then least square optimization method was applied to blade numbers. Optimization predicted 21 blade number as the most efficient blade number.

ACKNOWLEDGEMENTS

The corresponding author would like to thank Hampa Energy Engineering & Design Company (HEDCO) for their support.f and placed at the end of the text before the references.

References

[1] Jafarzadeh B, Hajari A, Alishahi MM, Akbari MH, 2011, "The flow simulation of a low-specific-speed high-speed centrifugal pump," Applied Mathematical Modelling, 35(1): pp. 242-249.

[2] Lin, S.-C. and C.-L. Huang, 2002, "An integrated experimental and numerical study of forward–curved centrifugal fan," Experimental Thermal and Fluid Science, 26(5): pp. 421-434.

[3] Tsai, B.J. and C.L. Wu, 2007, "Investigation of a miniature centrifugal fan," Applied Thermal Engineering, 27(1): pp. 229-239.

[4] Younsi M, Bakir F, Kouidri S, Rey R., 2007, "Influence of Impeller Geometry on the Unsteady Flow in a Centrifugal Fan: Numerical and Experimental Analyses," International Journal of Rotating Machinery, 2007: pp. 10.1155/2007/34901.

[5] Wang S, Zhang L, Wu Z, Qian H, 2009, "Optimization Research of Centrifugal Fan with Different Blade Number and Outlet Blade Angle," Power and Energy Engineering Conference, APPEEC 2009, Asia-Pacific, 1: pp. 27-31.

[6] Singh OP, Khilwani R, Sreenivasulu T, Kannan M, 2011, "Parametric Study of Centrifugal Fan Performance: Experiments and Numerical Simulation," International Journal of Advances in Engineering & Technology, 1(2): pp. 33-50.

[7] Lee Y-T, Ahuja V, Hosangadi A, Slipper ME, 2011., "Impeller Design of a Centrifugal Fan with Blade Optimization," International Journal of Rotating Machinery, 2011: pp. 16.

[8] Pranav, C.A. and R.T.K. Raj, 2012, "Numerical Design and Parametric Optimization of Centrifugal Fans with Airfoil Blade Impellers," Research Journal of Recent Sciences, 1(10): pp. 7-11.

[9] Eck, B., 1973, "Fans; design and operation of centrifugal, axial-flow, and cross-flow fans," Pergamon Press, ISBN: 9780080158723

[10] Lin, S.-C. and M.-L. Tsai, 2012, "An integrated performance analysis for a backward-inclined centrifugal fan," Computers & Fluids, 56(0): pp. 24-38.

[11] Amjadimanesh, A. and Ajam, H and Hossein Nezhad, A. 2014, " Effect of blade type on a 3D FC centrifugal fan," Journal of the Serbian Society for Computational Mechanics / Vol. 8 / No. 1, 2014 / pp. 23-35.

[12] Versteeg, H.H.K. and W. Malalasekera, 2007, "An introduction to computational fluid dynamics: the finite volume method," Pearson Education Australia, ISBN: 9780131274983

[13] Bleier, F., 1998, "Fan Handbook: Selection, Application, and Design," McGraw-Hill Education, ISBN: 9780070059337