Vol. 9(33), Jul. 2019, PP. 4220-4227

Contents list available at IJMEC

International Journal of Mechatronics, Electrical and Computer Technology (IJMEC)

Journal Homepage: www.aeuso.org

PISSN: 2411-6173 - EISSN: 2305-0543

Design and Implementation for an Indoor Mouse Repellent Device Based on Varied Ultrasonic Signal

Yaoxing Liu, Xuanji Feng, Zheng Huang, Ishwar Singh, Zhen Gao

W Booth School of Engineering Practice and Technology

McMaster University, Hamilton, Ontario, Canada

Corresponding Author's E-mail: gaozhen@mcmaster.ca

Abstract

This project consists both hardware and software design for reverse engineering a mouse repellent device. The objective is to be able to output sound frequency to drive mouse or insects away and be adjustable through wireless network from a webpage that can be accessed from PC, tablet or cell phone. The hardware of the mouse repellent consists AC to DC converter electrical circuit, ESP8266 module with Wi-Fi built in, voltage to frequency conversion ICs, PCB board and outer housing made with molding or 3D printing. The User Interface for controlling the output frequency is done with a web application. Autodesk Eagle software will be used for PCB design and SolidWorks will be used for shell molding design.

Keywords: *Mouse repellent device, Wireless communication, User interface*

1. Introduction

Various principles based on ultrasonic, vibrational, electrical, biochemical and electromagnetic approaches have been researched and applied for animal repellent devices in in-door environment [1-5]. Among all these methods, ultrasonic has the features of environmental and human friendly, low cost and easy to be maintained [6-10]. Pest and animal repellent device based on ultrasonic can be treated as a mechatronic tool that generates a certain range of sound wave which is above the range of human-hearing frequencies [11-12]. The basic principle in this project can be implemented directly to application of mouse repellent device. The philosophy behind the scene is the oscillation of the speaker which can generate uncomfortable frequency of sound so that the certain type of animal would be unwilling to stay within the operation range of the repellent device. However, this project has its special feature compared with the most mouse repellent out in the market. The special feature is that the frequency of the device is controllable, this feature makes this device capable of not only repelling mouse but also repelling other animals within the available physical limitations of the hardware which is built on the PCB. The level of customization gives the device a broader functionality and thus the users might get a better experience when they have variable demands that need to be satisfied.

Article History:
Received Date: Feb. 03, 2019
Accepted Date: Mar. 11, 2019
Available Online: Jul. 01, 2019

The features of the proposed mouse repellent devices are outlined as follows,

1. The mouse repellent device can be powered through AC wall outlet sockets or using solar panel power.
2. The mouse repellent device can be used indoor or outdoor.
3. The mouse repellent device can be wireless controlled through Wi-Fi or Bluetooth.
4. User can control the mouse repellent device through web-based interface or desktop application.
5. The Internal circuit components can be printed on a PCB or physical wired.
6. The mouse repellent device's accessibility is Local Area Network or Internet (cloud based).
7. The information can be shown on LED screen or no screen.
8. The main processor can be NodeMCU or Arduino Board.
9. The frequency generator can be Voltage signal to Frequency IC or crystal oscillator.
10. The sound is produced through Voice Coil Speaker or Piezoelectric Speaker.

2. Project Implementation

2.1 PCB Design

During prototype testing, it is decided to use AC to DC conversion circuit with transformers. In initial design, the transformer-less AC to DC circuit is utilized due to its smaller size advantage. However, during testing, it is discovered that the circuit components tends to overheat and often burn out immediately after switching the power on. The completed breadboard testing circuit is shown as follows,

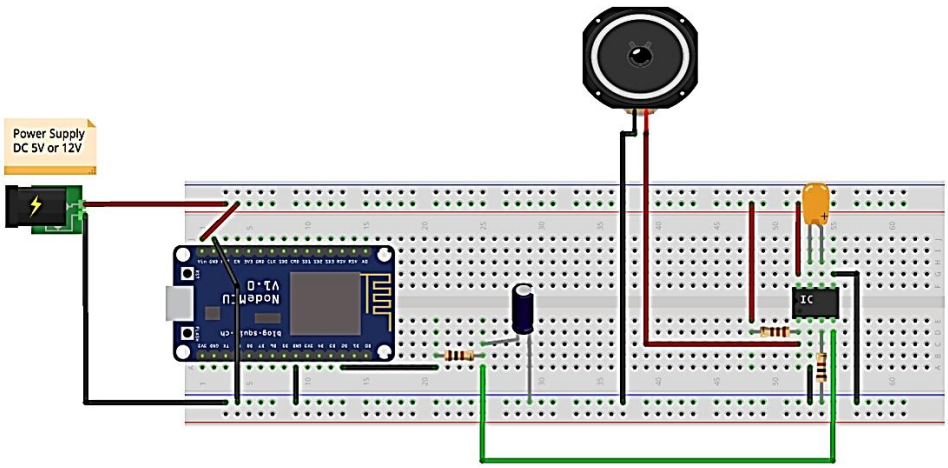

Figure 1. Prototype of PCB design

The circuit schematic diagram is shown as follows,

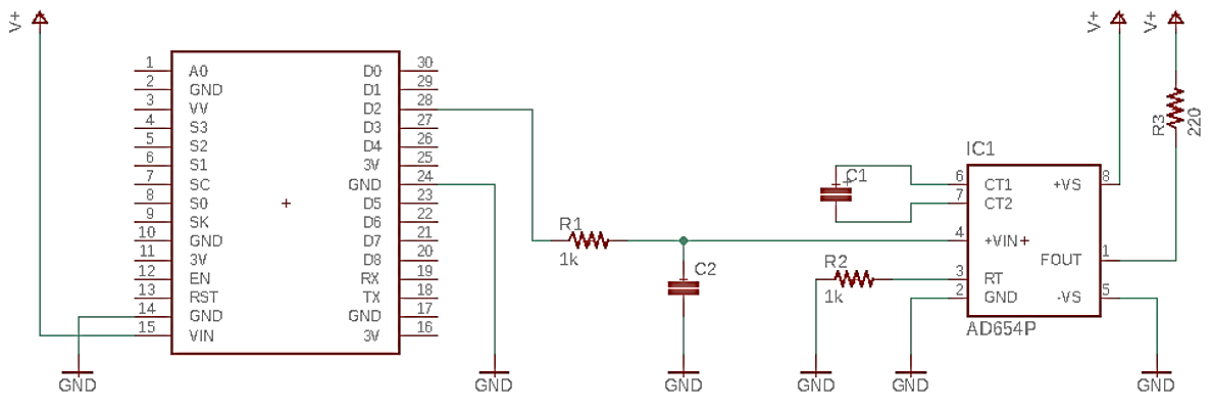

Figure 2. Circuit schematic diagram

The PCB layout diagram made with Autodesk Eagle is given here,

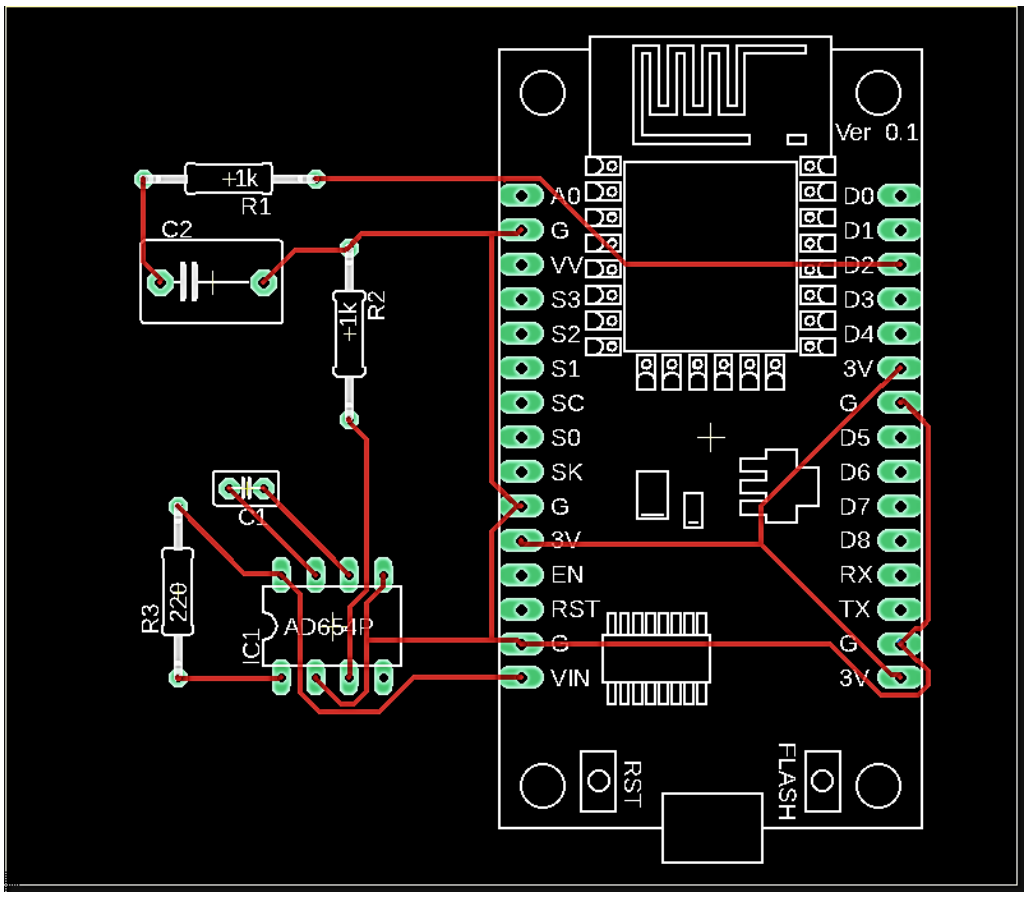

Figure 3. PCB layout diagram

2.2 PCB Fabrication Process

The PCB fabrication process is conducted based on PCB milling machine made by LPKF and the model is E33. The overall procedure goes as following,

- First, convert the Autodesk Eagle circuit schematic diagram to output the corresponding Gerber files for the traces and drilling holes.
- Then, copy the Gerber files and import them into Circuit Pro for setting up in the Circuit Pro software.

- Finally, use a blank copper plate and fix it onto the milling machine and pick up and change the proper milling tool bits from the tool kit.

The below photo of PCB is the first version using the milling machine. The problem it has is that the holes' size and placement for the drills are too far apart for the ESP8266 to fit, and also the board is a bit too large in physical size than expected.

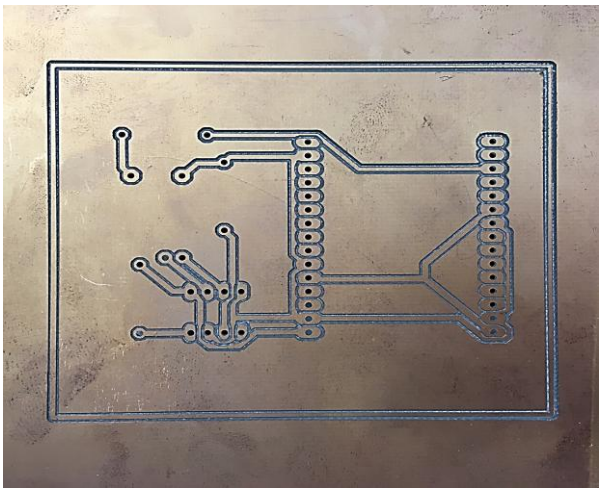

Figure 4. Manufactured PCB board

In order the fix the aforementioned problems, the drill hole size and placement for the model of the ESP8266 socket are manually adjusted to fix the problem of misaligned holes on PCB.

In order to further reduce the size of the PCB board, it is decided to stack the ESP8266 onto the rest of the components by using riser sockets to host the I/O pins of the ESP8266 to reduce the PCB board size in the X and Y direction by half and better utilized the vertical space in the Z direction.

Following figure show the redesigned schematic diagram and the soldered PCB board.

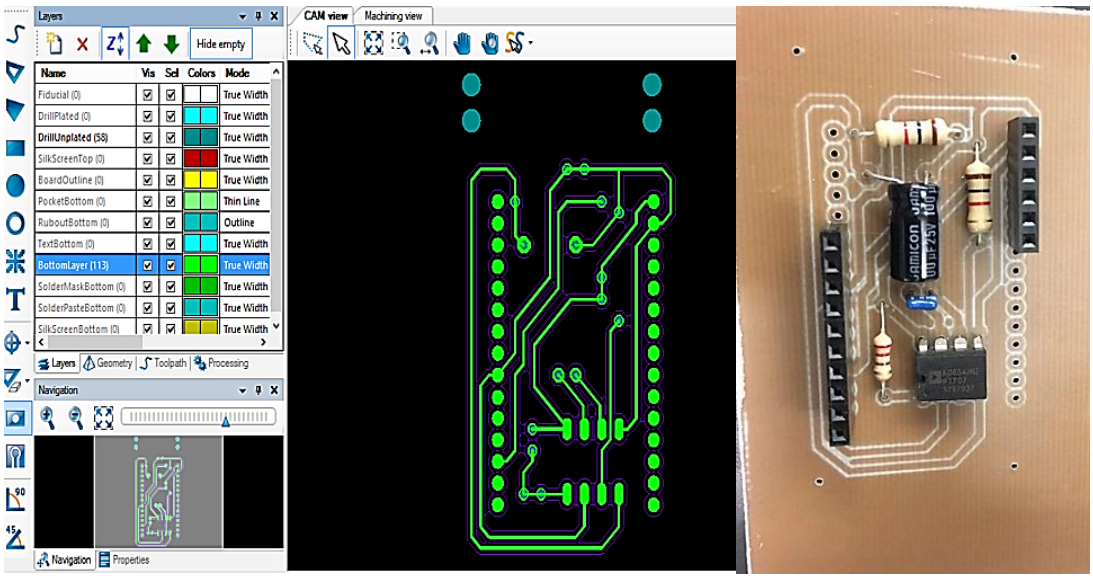

Figure 5. Redesigned schematic diagram and the soldered PCB board

2.3 Wireless control

Following step is to add wireless control as well as develop a web-based user interface. Overall, significant progress has been made in connectivity and HMI. First of all, the function to wirelessly control ESP8266 from a PC-based web browser was tested out. A LED can be turned on and off on breadboard by clicking web HMI's button. This is done via a router which has SSID and password for both the laptop and ESP8266 Wi-Fi chip to be inside the same network so they can establish communication between each other.

Secondly, it is decided to abandon using our TP-LINK router. Instead of connecting ESP8266 directly to WPA2 network, it is successfully connected it to a self-made Wi-Fi. It has internet access which makes the web application interface much more appealing compared to the interface running within LAN. It is because some online resources are retrieved through CDN when the web page renders, such as Bootstrap and Google Font. Basically, it is able to output different frequencies by pressing buttons on web page through wireless communication between browser and ESP8266 chip. The PWM signal imitates analog signal, and then being filtered by RC circuit in order to provide signal waves that assemble DC waveform. The signal then goes into a voltage to frequency converter circuit to generate variable frequency. Finally, the output frequency made the piezoelectric speaker to generate ultrasonic sound.

2.4 Outer Case

After finishing the design for all circuit, all the electronic components are soldered on the board. The last step is to 3D print an outer case. SolidWork is used to draw the 3D design and then import the file into Cura to 3D print it. For the main case, there are two layers, the top layer is used to put the power supply and can stuck it on the top. The bottom layer is for PCB board and the ESP8266 chip which can be easily take out and reprogram. There is also a hole on the case for placing the LED light. For the lid, there is a groove around it which can be used to stuck on the main case. Besides, there is a pillar which is used to fix the place of power supply. At last, the grids on the lid are used to emit the ultrasonic sound.

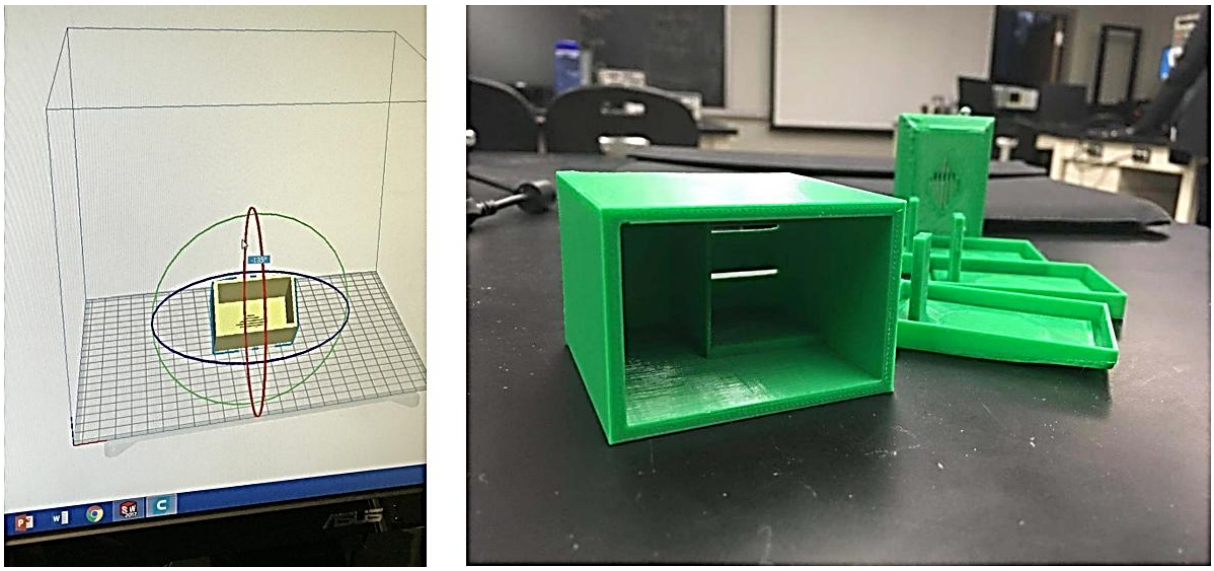

Figure 6. Prototype of outer case

2.5 Authentication Layer

In terms of programming, an authentication layer was added in our project whenever the user attempts to log on to the HMI for the first time. The correct credentials were pre-coded in a base-64 encoding format and then uploaded into ESP8266 chip. If the user cannot enter the correct username or password, the prompt-up window to still be displayed and require user to enter again if the end-user wants to open the web application. Otherwise, if the user clicks on 'cancel', the page would display 'Authentication Failed'. The purpose of this feature is to let authorized users to control the device. In order to increase the level of safety, it is decided to add an authentication layer to this project to more compatible with real-world situations.

2.6 Web HMI

Moreover, the web HMI has been upgraded in certain aspects as well. First of all, a status bar is added to indicate which frequency range are selected by user in a real-time manner. By doing this, the user would not need oscilloscope to understand which frequency the device is currently operating at. In terms of user experience, hover effect for all the frequency buttons is also added. This is done by assigning IDs to these individual frequency buttons with colors of the rainbow. Therefore, when user hovers upon these buttons, the page is likely to look more beautiful. Nevertheless, in order to emphasize the current status of the device, the current status of the device is highlighted in green color so that this line becomes more obvious to users. Besides, a melody button is designed which is a combination of several different tones generated in sequence. The melody can be accessed in the HMI page.

3. Discussion

The comparison of the proposed design and the other solution options are outlined as follows,

- Proposed design:
  AC wall outlet, indoor, Wi-Fi, Web-based user interface, printed on a PCB, internet, None, ESP8266 Nodemcu, Voltage signal to Frequency IC, Piezoelectric Speaker.
- The other solution options:
  Solar panel, outdoor, Bluetooth, desktop application, physical wiring, Local Area Network, LED, Arduino Board, Crystal oscillator, voice coil speaker.

Follows are the details of the proposed design and implementation.

1. For the power supply, it is decided to power the mouse repellent through AC wall outlet socket which is more stable. However, the solar panel power can keep the mouse repellent working during blackout.
2. It is decided to make the mouse repellent device can be used indoor which means the device cannot produce the frequency in wide range.
3. The mouse repellent device can be wireless controlled through Wi-Fi which means can remotely control the device, but it cannot be controlled without internet.

4. User can control the mouse repellent device through web-based interface which depose restrictions on electronic products
5. The Internal circuit components will be printed on a PCB, sound is produced through Voice Coil Speaker and the frequency generator can be Voltage signal to Frequency IC, all these improvements reduce the product size.
6. The main processor is ESP8266 NodeMCU which is easy to be updated using computer.

Following table shows the alternative solutions for this project.

Table 1. Alternative implementations

Functions	**Options**				
Power source	Battery pack	AC wall outlet	Solar panel Power	Wind turbine power	
Location of use	indoor	outdoor			
Wireless connectivity	Wi-Fi	Bluetooth	None		
User Interface for remote control	Android application	Web-based user interface	iOS application	Desktop application	OPC Data Access
Internal circuit components	Printed on a PCB	Physical wiring			
Accessibility	Local Area Network	Internet (cloud based)			
Display	LED	LCD	None		
Main processor	ESP8266	ESP8266 Node MCU	Arduino Board		
Frequency generator	Voltage signal to Frequency IC	Crystal oscillator	555 Timer IC	Function generator IC	
Sound Output	Voice Coil Speaker	Piezoelectric Speaker	Buzzer		

Conclusions

Overall, the goal of the project is to do the reverse engineering of mouse repellent device which consist both hardware and software designs. Throughout the project, three circuit schematic designs have been completed. The PCB board is manufactured as well as 3D printed the outer case for the final device. ESP8266 microprocessor is programmed to achieve wireless control of the output frequency through a web-based user interface that we constructed. The final device to function wirelessly through a Web user interface is also well finished.

As for potential future improvements to this project, the following points can be considered:

1. Add Op-Amp to enable volume control on output frequency.
2. Add Frequency Sensor for Frequency feedback monitoring system.
3. Add Internet connectivity (right now is only LAN).
4. Further reduce the physical size/volume of the device to make it more compact.

References

[1] Mamuna Naz, Najeeb Rehman, Mohd Nazam Ansari, Mehnaz Kamal, Majid A. Ganaie, Amani S. Awaad, Saleh I. Alqasoumi, Comparative study of subchronic toxicities of mosquito repellents (coils, mats and liquids) on vital organs in Swiss albino mice, Saudi Pharmaceutical Journal, 2018, pp. 1-6

[2] Quoc-Bao D. Nguyen, Mai-Anh N. Vu, Adelaide A. Hebert, Insect Repellents: An Updated Review for the Clinician, Journal of the American Academy of Dermatology, 2018, Accepted for publication https://doi.org/10.1016/j.jaad.2018.10.053.

[3] Johirul Islam, Kamaruz Zaman, Sanjukta Duarah, Pakalapati Srinivas Raju, Pronobesh Chattopadhyay, Mosquito repellents: An insight into the chronological perspectives and novel discoveries, Acta Tropica, Volume 167, 2017, Pages 216-230

[4] Scott J. Werner, Shelagh T. DeLiberto, Roger A. Baldwin, Gary W. Witmer, Repellent application strategy for wild rodents and cottontail rabbits, Applied Animal Behaviour Science, Volume 185, 2016, Pages 95-102

[5] Mototaka Arakawa, Hiroshi Kanai, Kazuo Ishikawa, Ryo Nagaoka, Kazuto Kobayashi, Yoshifumi Saijo, A method for the design of ultrasonic devices for scanning acoustic microscopy using impulsive signals, Ultrasonics, Volume 84, 2018, Pages 172-179

[6] António B. Mapossa, Mthokozisi M. Sibanda, Alcides Sitoe, Walter W. Focke, Leo Braack, Cyril Ndonyane, Joel Mouatcho, Jansie Smart, Herminio Muaimbo, René Androsch, Mattheüs T. Loots, Microporous polyolefin strands as controlled-release devices for mosquito repellents, Chemical Engineering Journal, Volume 360, 2019, Pages 435-444

[7] Dijendra Nath Roy, Ritobrata Goswami, Ayantika Pal, The insect repellents: A silent environmental chemical toxicant to the health, Environmental Toxicology and Pharmacology, Volume 50, 2017, Pages 91-102

[8] Damien Charabidze, Benoit Bourel, Valery Hedouin, Didier Gosset, Repellent effect of some household products on fly attraction to cadavers, Forensic Science International, Volume 189, Issues 1–3, 2009, Pages 28-33

[9] Shumake, S. A. 1997. Electronic rodent repellent devices: a review of efficacy test protocols and regulatory actions. Pages 253-270 in Mason, J. R., editor. Repellents in Wildlife Management (August 8-10, 1995, Denver, CO). USDA, National Wildlife Research Center, Fort Collins, CO

[10] Goran Jokić, Tanja Blažić, Tatjana Marković, Suzana Đedović, Dragica Brkić, Marina Vukša, Wild Mus musculus response on two different essential oils with high repellent potential, Journal of Stored Products Research, Volume 79, 2018, Pages 106-111

[11] Dinh Duc Nguyen, Huu Hao Ngo, Yong Soo Yoon, Soon Woong Chang, Hong Ha Bui, A new approach involving a multi transducer ultrasonic system for cleaning turbine engines' oil filters under practical conditions, Ultrasonics, Volume 71, 2016, Pages 256-263

[12] Hakan Işik, Sema Arslan, The design of ultrasonic therapy device via fuzzy logic, Expert Systems with Applications, Volume 38, Issue 6, 2011, Pages 7342-7348